CONSTRUCTION PLANS FOR:

HENDERSON BEACH RESORT ENTRY ROAD

UNSECTIONALIZED, TOWNSHIP 2 SOUTH, RANGE 22 WEST
OKALOOSA COUNTY, FLORIDA

PROJECT DATA

PROJECT NAME	HENDERSON BEACH ENTRY ROAD
CLIENT NAME	DUNAVANT GULF, LLC 36008 EMERALD COAST PARKWAY, UNIT A-101 DESTIN, FLORIDA 32541 901 368 1570 CONTACT MR BILL HAGERMANN
PREPARED BY	INNERLIGHT ENGINEERING CORPORATION 5450 NORTH 'W' STREET PENSACOLA, FLORIDA 32505
ENGINEEER OF RECORD	DAVID E SMITH, P E FLORIDA REG NO 58927 5450 NORTH 'W' STREET PENSACOLA, FLORIDA 32505 850 333 4370

UTILITY PROVIDERS

WATER PROVIDER	DESTIN WATER USERS 218 MAIN STREET DESTIN, FLORIDA 32541 850 837 6146
SEWER PROVIDER	DESTIN WATER USERS 218 MAIN STREET DESTIN, FLORIDA 32541 850 837 6146
POWER PROVIDER	GULF POWER 34854 EMERALD COAST PARKWAY DESTIN, FLORIDA 32541 850 244 4701
GAS PROVIDER	OKALOOSA GAS DISTRICT 14071 EMERALD COAST PARKWAY DESTIN, FLORIDA 32541 850 654 3113
TELEPHONE PROVIDER	COX COMMUNICATIONS, INC 320 RACETRACK ROAD NW FORT WALTON BEACH, FLORIDA 32547 850 695 9440
TV/CABLE PROVIDER	COX COMMUNICATIONS, INC 320 RACETRACK ROAD NW FORT WALTON BEACH, FLORIDA 32547 850 695 9440

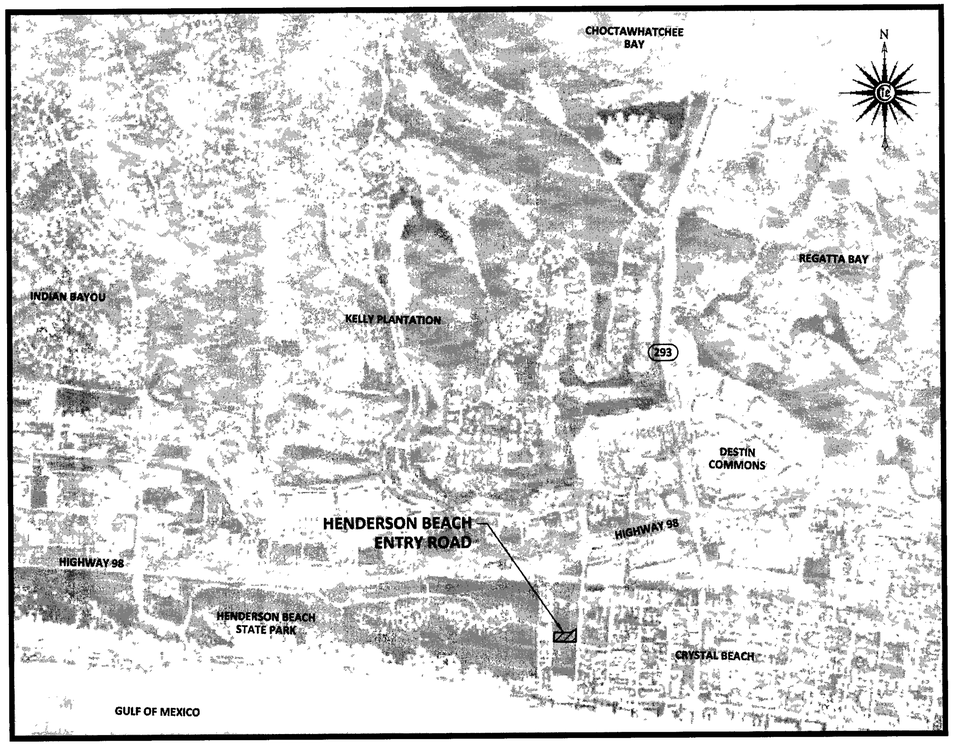

VICINITY MAP N.T.S.

SHEET INDEX

Sheet List Table

Sheet Number	Sheet Title
1 OF 8	COVER SHEET
2 OF 8	GENERAL NOTES (1 OF 2)
3 OF 8	GENERAL NOTES (2 OF 2)
4 OF 8	EXISTING CONDITIONS
5 OF 8	SITE & UTILITY PLAN WITH ROADWAY PROFILE
6 OF 8	GRADING & DRAINAGE PLAN
7 OF 8	CONSTRUCTION DETAILS (1 OF 2)
8 OF 8	CONSTRUCTION DETAILS (2 OF 2)

CONSTRUCTION NOTES

1 CONTRACTORS SHALL MAINTAIN PUBLIC ACCESS AT ALL TIMES ALONG OKALOOSA COUNTY RIGHT-OF-WAYS
2 NO PARKING OR UNLOADING OF MATERIALS SHALL OCCUR WITHIN PUBLIC RIGHT-OF-WAY
3 CONTRACTOR SHALL BE RESPONSIBLE FOR ANY DAMAGE TO STRUCTURES WITHIN THE PUBLIC RIGHT-OF-WAY AND SHALL REPAIR ANY DAMAGE CAUSED BY THE CONSTRUCTION ACTIVITIES TO THE PUBLIC RIGHT-OF-WAY AT THE CONTRACTOR'S EXPENSE
4 CONTRACTOR SHALL MARK ALL CROSSWALKS AND MULTI-USE PATH CROSSINGS TO INDICATE THEM AS A PEDESTRIAN PATHWAY AFTER THE FINAL ASPHALT IS IN PLACE
5 NOTHING SHALL BE ERECTED, PLACED, PARKED, PLANTED, OR ALLOWED TO GROW IN SUCH A MANNER AS TO MATERIALLY IMPEDE VISION BETWEEN A HEIGHT OF TWO FEET AND TEN FEET ABOVE THE GRADE, MEASURED AT THE CENTERLINE OF THE INTERSECTION FOR CLEAR VISIBILITY TRIANGLE
6 EROSION CONTROL & SEDIMENT PROTECTION IS THE RESPONSIBILITY OF CONTRACTOR

14-07-MS
PLANNING

APPROVED BY DESTIN CITY COUNCIL DATE/INITIALS 4/21/14 JMB

NOT RELEASED FOR CONSTRUCTION

No changes shall be made to, and construction shall not deviate from, these approved plans without prior written approval from the City of Destin. Unapproved deviations may result in the revocation of building permits and the inability to secure a Certificate of Occupancy.

Know what's below. Call before you dig.
Sunshine State One Call of Florida, Inc 811
www.callsunshine.com

INNERLIGHT ENGINEERING CORPORATION | 5450 NORTH W STREET | PENSACOLA | FLORIDA | 32505
THINK • SOLVE • THE APPLIED SCIENCE OF SUCCESS

HENDERSON BEACH RESORT ENTRY ROAD
DUNAVANT GULF, LLC
36008 EMERALD COAST PARKWAY, UNIT A-101
DESTIN, FLORIDA 32541

RECORD DATA
DATE 02 27 2014
REV DATE N/A
PROJ NO 131 0 0 10
DRAWN BY MTM
REVIEWED BY DES

SEAL
NOT VALID WITHOUT ORIGINAL SIGNATURE AND SEAL
DAVID E. SMITH
LICENSE No. 58927
MAR 25 2014
STATE OF FLORIDA
PROFESSIONAL ENGINEER
FLORIDA CERTIFICATE OF AUTHORIZATION 0022
INNERLIGHT ENGINEERING CORP
5450 NORTH W ST
PENSACOLA FL 32505
P 850 333 4370

SHEET TITLE
COVER SHEET

SHEET NUMBER
1 OF 8

INNERLIGHT ENGINEERING CORPORATION | THE DRAWINGS SPECIFICATIONS, AND OTHER DOCUMENTS PREPARED BY INNERLIGHT ENGINEERING CORPORATION (ILC) ARE FOR THE SOLE USE ON THIS PROJECT UNLESS OTHERWISE PROVIDED, ILC SHALL BE DEEMED THE AUTHOR AND RETAIN ALL COMMON LAW STATUTORY AND OTHER RESERVED RIGHTS, INCLUDING COPYRIGHT

GENERAL NOTES

1 THE EXACT LOCATION AND ELEVATION OF EXISTING STRUCTURES, UTILITIES, AND PIPING SHALL BE PHYSICALLY VERIFIED IN THE FIELD BY THE CONTRACTOR BEFORE CONSTRUCTION BEGINS THESE DRAWINGS DO NOT PURPORT TO SHOW IN COMPLETE DETAIL ALL EXISTING STRUCTURES, UTILITIES, OR PIPING THE CONTRACTOR SHALL EXAMINE ALL AVAILABLE RECORDS AND MAKE ALL EXPLORATIONS AND EXCAVATIONS AS REQUIRED TO DETERMINE THE LOCATION OF EXISTING STRUCTURES, UTILITIES, AND PIPING, WHENEVER NECESSARY THE OWNER RESERVES THE RIGHT TO CHANGE LOCATION OF LINES TO AVOID CONFLICT WITH EXISTING STRUCTURES, UTILITIES, OR PIPING

2 THE CONTRACTOR SHALL CHECK PLANS FOR CONFLICTS AND DISCREPANCIES PRIOR TO CONSTRUCTION THE CONTRACTOR SHALL NOTIFY THE OWNER OR OWNER'S ENGINEER OF ANY CONFLICT, IN WRITING, BEFORE PERFORMING ANY WORK IN THE AFFECTED AREA ENGINEER WILL HAVE 7 DAYS TO PROVIDE A RESPONSE

3 THE CONTRACTOR SHALL EXERCISE EXTREME CAUTION IN AREAS OF BURIED UTILITIES AND SHALL PROVIDE AT LEAST 48 HOURS NOTICE TO THE VARIOUS UTILITY COMPANIES IN ORDER TO PERMIT MARKING THE LOCATIONS OF EXISTING UNDERGROUND UTILITIES IN ADVANCE OF CONSTRUCTION

4 THE CONTRACTOR IS RESPONSIBLE FOR REPAIRING ANY DAMAGE TO EXISTING FACILITIES ABOVE OR BELOW GROUND THAT MAY OCCUR AS A RESULT OF WORK CALLED FOR IN THESE CONTRACT DOCUMENTS ALL REPAIRS MUST BE MADE TO THE SATISFACTION OF THE RESPECTIVE OWNER

5 IT SHALL BE THE RESPONSIBILITY OF THE CONTRACTOR TO LEARN, KNOW, AND COMPLY WITH THE REGULATIONS, ORDINANCES, PERMIT AND INSPECTION REQUIREMENTS OF THE VARIOUS GOVERNMENTAL AGENCIES HAVING JURISDICTION IT WILL BE THE RESPONSIBILITY OF THE CONTRACTOR TO REVIEW AND COMPLY WITH THE CONDITIONS OF THE VARIOUS PERMITS OF THE GOVERNMENTAL AGENCIES THE CONTRACTOR SHALL SCHEDULE THE REQUIRED INSPECTIONS AND APPROVALS IN ACCORDANCE WITH THE REQUIREMENTS OF THE PERMIT CONDITIONS THE CONTRACTOR SHALL NOTIFY THE NECESSARY AGENCIES OF CONSTRUCTION COMMENCEMENT

6 ALL SPECIFICATIONS AND DOCUMENTS REFERRED TO SHALL BE OF LATEST ISSUE AND SHALL BE CONSIDERED A PART OF THESE DOCUMENTS BY REFERENCE

7 THE CONTRACTOR SHALL BE RESPONSIBLE FOR THE SETTING OF CONSTRUCTION STAKES TO MARK THE LOCATION, ALIGNMENT, ELEVATION, AND GRADE OF THE WORK THE STAKES PROVIDED SHALL BE ADEQUATE IN NUMBER, POSITION, AND ELEVATION SO THAT THE PHYSICAL ITEM CAN BE CONSTRUCTED IN ACCORDANCE WITH THE PLANS THE CONSTRUCTION LAYOUT SURVEY SHALL MEET THE MINIMUM TECHNICAL STANDARDS FOR LAND SURVEYING IN THE STATE OF FLORIDA (CHAPTER 21HH-6, FLORIDA ADMINISTRATIVE CODE), AND SHALL BE PERFORMED BY A PERSON OF ADEQUATE EXPERTISE FAILURE TO PERFORM THE CONSTRUCTION STAKEOUT IN ACCORDANCE WITH THE CONSTRUCTION PLANS MAY RESULT IN REMOVAL AND REPLACEMENT OF THE IMPROVEMENTS AT NO EXPENSE TO THE OWNER CONSTRUCTION LAYOUT INFORMATION HAS BEEN PROVIDED IN THE FORM OF DIMENSIONS AND OFFSETS OBTAINED THROUGH COMPUTER GENERATION THE INFORMATION IS ADEQUATE FOR THE CONSTRUCTION LAYOUT OF THE IMPROVEMENTS USING STANDARD SURVEYING CONSTRUCTION LAYOUT TECHNIQUES IN NO CASE SHALL THE CONTRACTOR SCALE INFORMATION FROM THE PLANS OR ATTEMPT TO CONSTRUCT IMPROVEMENTS WITHOUT PERFORMING THE CONSTRUCTION LAYOUT IN ACCORDANCE WITH THE INFORMATION CONTAINED HEREIN

8 THE CONTRACTOR SHALL OBTAIN AND HAVE ONSITE ALL PERMITS PRIOR TO CONSTRUCTION, INCLUDING BUT NOT LIMITED TO, F D E P , F D O T , AND THE LOCAL GOVERNMENT THE CONTRACTOR SHALL OBTAIN ALL OTHER REQUIRED PERMITS

9 PRIOR TO COMMENCING CONSTRUCTION OR DEMOLITION / LAND CLEARING ACTIVITIES, CONTRACTOR SHALL INSTALL ANY REQUIRED SILT FENCING OR BALED HAY BARRIERS (F D O T INDEX 102) FOR SILT CONTROL THERE WILL BE NO DIRECT PAYMENT FOR THIS WORK COST SHALL BE INCLUDED IN OTHER ITEMS OF WORK LOCATION SHALL BE AS SHOWN ON THE PLANS OR AS DIRECTED IN THE FIELD

10 DEWATERING SHOULD LOWERING OF GROUNDWATER BE NECESSARY FOR THE INSTALLATION OF CONCRETE STRUCTURES, WATER MAIN ETC , OR TO PREVENT LATERAL MOVEMENT OF MATERIAL UNDER CONCRETE ALREADY PLACED, SUCH LOWERING SHALL BE ACCOMPLISHED BY MEANS OF A WELL POINT SYSTEM OR OTHER APPROVED MEANS, AT CONTRACTOR'S EXPENSE COMPREHENSIVE PLANS FOR DE- WATERING OPERATIONS, IF USED, SHALL BE SUBMITTED BY THE CONTRACTOR PRIOR TO INSTALLATION DISCHARGE OF GROUNDWATER TO SURFACE WATERS OF THE STATE REQUIRES A PERMIT UNDER F A C 62-621 300(2) CONTRACTOR SHALL BE RESPONSIBLE FOR OBTAINING AN ANALYSIS OF GROUND WATER IN ACCORDANCE WITH THE GENERIC PERMIT FOR THE DISCHARGE OF PRODUCED GROUND WATER FROM ANY NON-CONTAMINATED SITE ACTIVITY - TABLE 1, AND FILING APPROPRIATE NOTIFICATIONS TO THE FDEP INDUSTRIAL WASTEWATER DIVISION

11 ALL CONSTRUCTION SHALL BE IN ACCORDANCE WITH FDOT STANDARD SPECIFICATIONS FOR ROAD AND BRIDGE CONSTRUCTION, LATEST EDITION UNLESS OTHERWISE DIRECTED

12 CONTRACTOR SHALL OBTAIN, IF AVAILABLE, AND REVIEW ALL AVAILABLE GEOTECHNICAL REPORTS PRODUCED FOR THE SITE PRIOR TO COMMENCEMENT OF CONSTRUCTION IF NO GEOTECHNICAL REPORTS ARE AVAILABLE, THE CONTRACTOR IS RESPONSIBLE FOR DETERMINING SITE SOIL CONDITIONS PRIOR TO CONSTRUCTION

13 CONTRACTOR IS RESPONSIBLE FOR PROVIDING SIGNED AND SEALED RECORD DRAWINGS SHOWING ALL IMPROVEMENTS CONSTRUCTED UNDER THIS CONTRACT RECORD DRAWINGS SHALL INCLUDE BOTH ABOVE GROUND AND BURIED UTILITIES INCLUDING ANY EXISTING UTILITIES NOT SHOWN ON THESE PLANS BUT ENCOUNTERED DURING THE CONSTRUCTION PROCESS RECORD DRAWINGS SHALL BE SIGNED AND SEALED BY A FLORIDA REGISTERED LAND SURVEYOR CONTRACTOR SHALL CONTACT ENGINEER OF RECORD FOR SPECIFIC REQUIREMENTS

14 CONTRACTOR IS RESPONSIBLE FOR CONTINUATION OF SERVICE TO OCCUPIED BUILDINGS DURING CONSTRUCTION AND REPAIR OR REPLACEMENT OF ANY EXISTING UTILITIES IMPACTED BY CONSTRUCTION

15 IF WELLS ARE ENCOUNTERED ON SITE, THEY SHALL BE ABANDONED BY A FLORIDA CERTIFIED WELL DRILLER USING ABANDONMENT PROCEDURES AND PERMITTING PROCESS OF THE LOCAL WATER MANAGEMENT DISTRICT OR OTHER APPLICABLE REGULATORY AGENCY

16 IF APPLICABLE, ANY WELLS PROPOSED ONSITE, I E IRRIGATION, GEOTHERMAL, ETC SHALL BE PERMITTED APPROPRIATELY THROUGH THE LOCAL WATER MANAGEMENT DISTRICT PERMITTING IS THE RESPONSIBILITY OF THE CONTRACTOR UNLESS OTHERWISE ARRANGED

17 CONTRACTOR SHALL CALL BEFORE DIGGING TO SUNSHINE STATE ONE CALL OF FLORIDA AT 800-432-4770

18 PRIOR TO COMMENCEMENT OF DEMOLITION AND CONSTRUCTION ACTIVITIES, CONTRACTOR IS TO INSTALL ADEQUATE BARRIERS TO RESTRICT PUBLIC AREAS IN AREAS WHERE CONSTRUCTION ACTIVITIES ARE DIRECTLY ADJACENT TO HIGH TRAFFIC ROUTES, MAY RESULT IN THE CREATION OF DUST OR PROJECTILES, SOLID BARRIERS (SUCH AS CANVAS OR PLYWOOD) MUST BE USED

HANDICAP ACCESSIBILITY

1 HANDICAP RAMPS AND CROSSWALKS PER THE LATEST FLORIDA ACCESSIBILITY CODE, A D A AND FDOT STANDARD INDEX #304 ARE REQUIRED AT ALL PEDESTRIAN CROSSING LOCATIONS

ARCHITECTURAL COORDINATION

1 WHEN APPLICABLE, ARCHITECTURAL PLANS SHALL SUPERSEDE THESE PLANS WITH RESPECT TO ALL BUILDING DIMENSIONS AND BUILDING HARDSCAPE INTERFACE IN CASE OF CONFLICT AND PRIOR TO CONSTRUCTION, CONTRACTOR IS RESPONSIBLE FOR CONTACTING BOTH THE ENGINEER AND ARCHITECT IMMEDIATELY

STRUCTURAL COORDINATION

1 WHEN APPLICABLE, CONTRACTOR SHALL REFER TO THE CONSTRUCTION DETAILS AND SPECIFICATIONS OF THE APPLICABLE STRUCTURAL PLANS FOR ALL SITE RETAINING WALLS AND OTHER STRUCTURAL COMPONENTS

SIGNAGE

1 PROJECT SIGNS SHALL MEET ALL APPLICABLE REQUIREMENTS BASED ON LOCAL SIGN ORDINANCE

2 CONTRACTOR IS RESPONSIBLE FOR SIGN PERMITTING

DEMOLITION·

1 ALL EXISTING CONCRETE, ASPHALT, TREES, STUMPS, AND OTHER DELETERIOUS MATERIAL AS INDICATED ON THE PLANS SHALL BE REMOVED FROM THE SITE AND PROPERLY MANAGED AND DISPOSED OF IN ACCORDANCE WITH FLORIDA LAWS

2 WHERE PAVEMENT IS TO BE REMOVED AND REPLACED, AS INDICATED ON THE PLANS OR DIRECTED IN THE FIELD, ALL EXISTING MARKINGS AND TRAFFIC LOOPS SHALL ALSO BE REPLACED THERE WILL BE NO DIRECT PAYMENT FOR THIS WORK COST SHALL BE INCLUDED IN RELATED ITEMS OF WORK

3 ALL EXISTING PAVEMENT AND DRIVEWAY PAVEMENT TO BE REMOVED SHALL BE SAW CUT

4 REPAIR ALL EXISTING DRIVEWAYS CROSSED BY UTILITY CONSTRUCTION TO MATCH EXISTING CONSTRUCTION

5 CONTRACTOR SHALL TRIM, TACK AND MATCH EXISTING PAVEMENT AT LOCATIONS WHERE NEW PAVEMENT ABUTS

6 ANY DISTURBED MAIL BOXES OR SIGNS MUST BE REINSTALLED TO EXISTING OR ACCEPTABLE CONDITION AT THE CONTRACTOR'S EXPENSE

7 ALL ITEMS NOTED AS "REMOVE AND SALVAGE" ARE TO REMAIN THE PROPERTY OF OWNER CARE MUST BE TAKEN NOT TO DAMAGE SALVAGED ITEMS ITEMS ARE TO BE TRANSPORTED TO A STORAGE LOCATION SPECIFIED BY THE OWNER

SEDIMENTATION AND EROSION CONTROL NOTES

1 CONTRACTOR SHALL STAGE AND TIME CONSTRUCTION TO MINIMIZE THE SIZE OF EXPOSED SOIL AREAS AND THE TIME BETWEEN EXPOSING THE SOIL AREA AND FINISHING THE SOIL AREA

2 AS SOON AS GRADING IS COMPLETE IN AN AREA, THE CONTRACTOR WILL STABILIZE THE SOIL FOR LONG, NARROW AREAS, THE CONTRACTOR SHALL STABILIZE CONTINUOUSLY DURING GRADING OPERATIONS ROUGH GRADED AREAS SHOULD BE STABILIZED WITH TEMPORARY EROSION CONTROL IF FINAL GRADING AND STABILIZATION WILL NOT BE PERFORMED WITHIN FIVE (5) DAYS FAILURE TO STABILIZE EXPOSED SOIL AREAS IN A TIMELY MANNER AFTER GRADING MAY BE CONSIDERED A VIOLATION OF CHAPTERS 17-3, 17-12, AND/OR 17/25, FLORIDA ADMINISTRATIVE CODE, BY THE FLORIDA DEPARTMENT OF ENVIRONMENTAL PROTECTION (F D E P) AND SUBJECT TO CORRECTIVE ACTION, PURSUANT TO SECTION 403 121- 403 161 FLORIDA STATUTES

3 IT SHALL BE THE RESPONSIBILITY OF THE CONTRACTOR PERFORMING A TASK TO PROVIDE EROSION CONTROL UNLESS ANOTHER PARTY HAS BEEN PREVIOUSLY SPECIFIED AS RESPONSIBLE FOR THE EROSION CONTROL ASSOCIATED WITH THAT TASK IN THE EVENT ANOTHER PARTY IS RESPONSIBLE FOR EROSION CONTROL, THE CONTRACTOR SHALL STILL BE RESPONSIBLE FOR COORDINATION WITH THE PARTY RESPONSIBLE IN THE EVENT THAT DAMAGE TO THE CONSTRUCTED ITEM RESULTS ARE DUE TO LACK OF EROSION CONTROL, THE CONTRACTOR SHALL REPAIR OR REPLACE THE ITEM AT NO CHARGE TO THE OWNER

4 TEMPORARY EROSION CONTROL SHALL CONSIST OF TEMPORARY GRASS, TEMPORARY MULCH, TEMPORARY SOD, ARTIFICIAL COVERINGS, BALED HAY OR STRAW, SILT FENCES, AND TURBIDITY BARRIERS AS SHOWN ON THE CONSTRUCTION DRAWINGS AND IN ACCORDANCE WITH APPROPRIATE TECHNICAL SPECIFICATIONS IF TECHNICAL SPECIFICATIONS ARE NOT PROVIDED, THEN TEMPORARY EROSION CONTROL SHALL BE IN ACCORDANCE WITH SECTION 104 OF THE FLORIDA DEPARTMENT OF TRANSPORTATION (F D O T) STANDARD SPECIFICATIONS

5 PERMANENT EROSION CONTROL SHALL CONSIST OF SEED, SEED AND MULCH, HYDRO-SEEDING, SOD, AND/OR ARTIFICIAL COVERINGS AS SHOWN ON THE CONSTRUCTION DRAWINGS AND IN ACCORDANCE WITH TECHNICAL SPECIFICATION SECTIONS 12 AND 13 IF TECHNICAL SPECIFICATIONS ARE NOT PROVIDED THEN PERMANENT EROSION CONTROL SHALL BE IN ACCORDANCE WITH SECTIONS 570 AND 575 OF THE F D O T STANDARD SPECIFICATIONS SEED OR GRASS TYPE SHALL MATCH EXISTING OR BE AS SPECIFIED BY OWNER UNLESS NOTED OTHERWISE

6 GRASS BY SEEDING SHALL BE IN ACCORDANCE WITH SECTIONS 104, 570, 981, 982, AND 983 OF F D O T STANDARD SPECIFICATIONS THIS SHALL BE USED ONLY IN AREAS SUBJECT TO LIGHT EROSION SUCH AS FLAT AREAS

7 GRASS BY HYDRO-SEEDING SHALL BE IN ACCORDANCE WITH SECTIONS 104, 570, 981, 982, AND 983 OF F D O T STANDARD SPECIFICATIONS HYDRO-SEEDING MAY BE USED FOR FLAT AREAS AND SIDE SLOPES WHICH DO NOT EXCEED 4 1 DRAINAGE DITCHES OR LARGE SWALES MUST HAVE ADDITIONAL PROTECTION BESIDES HYDRO-SEEDING

8 GRASS AND MULCH SHALL BE IN ACCORDANCE WITH SECTIONS 104, 570, 981, 982, AND 983 OF F D O T STANDARD SPECIFICATIONS GRASS AND MULCH MAY BE USED IN ALL AREAS EXCEPT LARGE SWALES OR DITCHES MULCH SHALL BE ANCHORED IN ACCORDANCE WITH SECTION 570

9 SOLID SOD SHALL BE IN ACCORDANCE WITH SECTIONS 104, 575, 981, 982, AND 983 OF F D O T STANDARD SPECIFICATIONS SOD MAY BE USED IN ALL AREAS FOR SIDE SLOPES GREATER THAN OR EQUAL TO 2 1 SOD SHALL BE STAGGERED SO AS TO AVOID A CONTINUOUS SEAM IN AREAS WITH SLOPES 4 1 OR STEEPER, EACH PIECE OF SOD SHALL BE PEGGED WITH SOD PEGS IN DIFFICULT SOIL CONDITIONS WITH STEEP SLOPES, IT MAY NECESSARY TO COVER SOD WITH ARTIFICIAL COVERINGS SUCH AS JUTE MESH UNTIL SOD BECOMES ESTABLISHED

10 TEMPORARY EROSION CONTROL BY ARTIFICIAL COVERINGS SHALL CONSIST OF STRAW BLANKETS, COCONUT FIBER BLANKETS, POLYESTER BLANKETS, JUTE MESH, AND DRAINAGE FABRICS MATERIALS SHALL BE INSTALLED IN ACCORDANCE WITH MANUFACTURER'S RECOMMENDATIONS SEEDING SHALL BE INCLUDED IF MATERIAL REQUIRES VEGETATION TO FUNCTION PROPERLY

11 THE CONTRACTOR IS TO PROVIDE EROSION CONTROL/ SEDIMENTATION BARRIER (HAY BALES, SILT FENCE, TURBIDITY BARRIER, OR AS SPECIFIED IN THE CONSTRUCTION DRAWINGS) TO PREVENT SILTATION OF ADJACENT PROPERTY, STREETS, STORM SEWERS, WATERWAYS, AND WETLAND OR JURISDICTIONAL AREAS IF, IN THE OPINION OF THE ENGINEER, AND/OR REGULATORY AUTHORITIES, EXCESSIVE QUANTITIES OF MATERIAL ARE TRANSPORTED OFF- SITE BY EROSION OR STORMWATER RUNOFF, THE CONTRACTOR SHALL IMPROVE CONDITIONS TO THE SATISFACTION OF THE ENGINEER AND/OR AUTHORITIES IN NO CASE SHALL CONSTRUCTION COMMENCE PRIOR TO INSTALLATION OF EROSION CONTROL/SEDIMENTATION BARRIER

12 CONTRACTOR SHALL PLACE STRAW, MULCH, OR OTHER SUITABLE MATERIAL ON GROUND IN ADDITION TO COARSE AGGREGATE IN AREAS WHERE CON- STRUCTION-RELATED TRAFFIC IS TO ENTER AND EXIT SITE

13 IF WIND EROSION BECOMES SIGNIFICANT DURING CONSTRUCTION, THE CONTRACTOR SHALL STABILIZE THE AREA USING SPRINKLING IRRIGATION OR OTHER ACCEPTABLE METHODS

14 ALL DISTURBED AREAS NOT PAVED, SODDED OR OTHERWISE LANDSCAPED SHALL BE SEEDED, FERTILIZED AND MULCHED PER FDOT SPECIFICATIONS, SECTION 570 SEEDING RATE AND MIX SHALL COMPLY WITH THE SEEDING RATE TABLE OFF DOT STANDARD INDEX 105

15 CONTRACTOR SHALL SOD ALL SLOPES 4 1 AND STEEPER IMMEDIATELY AFTER CONSTRUCTION UNLESS OTHERWISE DIRECTED BY THE ENGINEER

16 ALL EXCAVATED SOILS SHALL BE STOCKPILED IN LOCATION(S) INDICATED ON PLANS IF SHOWN APPROPRIATE SEDIMENTATION AND EROSION CONTROLS SHALL BE INSTALLED AROUND THE STOCKPILE

MAINTENANCE

1 THE CONTRACTOR SHALL PROVIDE ROUTINE MAINTENANCE OF PERMANENT AND TEMPORARY EROSION CONTROL FEATURES IN ACCORDANCE WITH TECHNICAL SPECIFICATIONS SECTION 10, 12, AND 13 UNTIL THE PROJECT IS COMPLETED AND ACCEPTED IF TECHNICAL SPECIFICATIONS ARE NOT PROVIDED, THEN MAINTENANCE SHALL BE IN ACCORDANCE WITH SECTION 104 OF THE FLORIDA DEPARTMENT OF TRANSPORTATION (F D O T) STANDARD SPECIFICATIONS

2 SILT FENCES AND TURBIDITY BARRIERS SHALL BE CHECKED DAILY FOR EFFECTIVENESS, BREACHES, AND ROUTINE MAINTENANCE

3 ALL DISTURBED AREAS TO BE PERMANENTLY GRASSED AND RETENTION AREAS TO BE SODDED

SITE GEOMETRY NOTES

1 ALL BUILDING DIMENSIONS ARE TO THE FACE OF BUILDING UNLESS OTHERWISE NOTED

2 ALL DIMENSIONS ALONG CURB LINES ARE TO THE BACK OF CURB UNLESS OTHERWISE NOTED

STORMWATER MANAGEMENT NOTES

1 JUNCTION BOXES OUTSIDE THE RIGHT OF WAY MUST BE CAST IRON CAPABLE OF HANDLING LIVE LOADS AND BE CAST WITH "STORM" ON THE COVER

PAVING, GRADING & EARTHWORK NOTES.

1 IN EXCAVATING STREETS AND DRIVEWAYS THAT HAVE BEEN SURFACED WITH SAND-CLAY, CLAY GRAVEL, OR OTHER BASE COURSE, SUCH BASE MATERIALS SHALL BE EITHER STOCKPILED AND KEPT SEPARATE FROM THE EARTH EXCAVATED OR THE CONTRACTOR SHALL, AT HIS EXPENSE, PROVIDE NEW BASE OF LIKE KIND AND EQUAL QUALITY

2 CONTRACTOR MUST SALVAGE EXISTING TOP SOIL WITHIN PROJECT SITE OR REPLACE AT HIS OWN EXPENSE

3 ANY DEFICIENCY IN THE QUANTITY OF MATERIAL FOR BACKFILLING THE TRENCHES, OR FOR FILLING DEPRESSIONS CAUSED BY SETTLEMENT, SHALL BE SUPPLIED BY THE CONTRACTOR AT NO COST TO THE OWNER THIS ALSO APPLIES TO BASE COURSE UNDER PAVED STREETS

4 CONTRACTOR SHALL CLEAR AND GRUB ONLY THOSE PORTIONS OF THE SITE NECESSARY FOR CONSTRUCTION CLEAR AND GRUB SHALL CONSIST OF THE REMOVAL OF ALL DELETERIOUS MATERIAL INCLUDING TREES, ROOTS, TOPSOIL, ETC

5 ORGANIC, UNSUITABLE SOILS BENEATH THE PAVED AREAS SHALL BE REMOVED AND REPLACED WITH CLEAN SAND MATERIAL OF WHICH NOT MORE THAN 15% BY DRY WEIGHT IS FINER THAN THE NUMBER 200 MESH SIEVE FILL MATERIAL SHALL BE FREE OF ORGANICS, RUBBLE, CLAY, OR OTHER DELETERIOUS MATTER

6 THE PAVEMENT SUBGRADE SHOULD BE STABILIZED TO A MINIMUM LBR OF 40 UNLESS OTHERWISE SPECIFIED MATERIAL FOR STABILIZATION SHALL BE AS CALLED OUT ON THE PLANS, OR OTHER MATERIAL APPROVED BY THE ENGINEER AND THE GEOTECHNICAL ENGINEER COMPACTION OF THE SUBGRADE SHALL BE BY A HEAVY VIBRATORY ROLLER (MINIMUM STATIC WEIGHT OF FIVE TONS) WITH A MINIMUM OF 10 PASSES WITH A 20% OVERLAP BETWEEN PASSES THE VIBRATORY ROLLER SHOULD ALSO BE EQUIPPED WITH A VARIABLE FREQUENCY CONTROL TO OPERATE AT THE RESONANT FREQUENCY OF THE SOILS

7 ALL WASTE MATERIAL SHALL BE DISPOSED OF OFFSITE IN ACCORDANCE WITH APPLICABLE REGULATIONS

8 PROPOSED SPOT ELEVATIONS REPRESENT FLOW LINE OF CURB & GUTTER OR FINISHED PAVEMENT OR GROUND SURFACE GRADE UNLESS OTHERWISE NOTED ON DRAWINGS

9 CONTRACTOR TO PROVIDE 1/2" TO 1" BITUMINOUS EXPANSION JOINT MATERIAL WITH SEALER AT ABUTMENT OF CONCRETE AND OTHER MATERIALS (BUILDINGS, OTHER POURED CONCRETE, ETC) EXCEPT ASPHALT

10 CONTRACTOR SHALL TRIM, TACK AND MATCH EXISTING PAVEMENT AT LOCATIONS WHERE NEW PAVEMENT ABUTS

11 TESTING REQUIREMENTS SHALL BE IN ACCORDANCE WITH THE TESTING SCHEDULE CONTAINED WITHIN THESE PLANS OR PER APPLICABLE LOCAL GOVERNMENT OR REGULATORY AGENCY, WHICHEVER IS MORE STRINGENT SELECTION AND CONTRACTING WITH THE TESTING FIRMS SHALL BE THE RESPONSIBILITY OF THE CONTRACTOR IT SHALL BE THE RESPONSIBILITY OF THE CONTRACTOR TO COORDINATE AND SCHEDULE ALL TESTS

12 ACCEPTANCE TESTING FOR NEW PAVEMENT, IF APPLICABLE, SHALL CONSIST OF ONE PASS OF A STANDARD 15-FOOT ROLLING STRAIGHT EDGE OPERATED WHILE THE PAVEMENT IS STILL HOT ALL DEFICIENCIES IN EXCESS OF 3/16 INCH SHALL BE CORRECTED IN ACCORDANCE WITH F D O T STANDARD SPECIFICATION 330

13 AT THE OPTION OF THE OWNER, THE CONTRACTOR SHALL FLOOD ALL NEW PAVEMENT SURFACES WITH WATER AND INSPECT FOR PONDING ALL PONDED AREAS SHALL BE CORRECTED IN ACCORDANCE WITH F D O T STANDARD SPECIFICATION 330

TRAFFIC, SIGNAGE & STRIPING NOTES

1 IT SHALL BE THE CONTRACTOR'S SOLE RESPONSIBILITY TO INSTALL AND MAINTAIN ADEQUATE TRAFFIC CONTROL AND TO PROVIDE DETOURS AROUND CONSTRUCTION ACTIVITIES UNLESS APPROVED BY THE OWNER, IN WRITING, NO STREET SHALL REMAIN CLOSED TO TRAFFIC OVERNIGHT IN ADDITION, THE CONTRACTOR SHALL COOPERATE WITH LOCAL GOVERNMENT AGENCIES AND LOCAL RESIDENTS IN GAINING ACCESS TO THEIR ROADS, HOMES AND BUSINESSES DURING WORKING HOURS AND SHALL ASSIST AT ALL TIMES WHEN VEHICLES EXPERIENCE TROUBLE DUE TO CONSTRUCTION ACTIVITIES

2 THE CONTRACTOR SHALL INSTALL, INSPECT, AND MAINTAIN ALL TEMPORARY TRAFFIC CONTROL DEVICES REQUIRED FOR THE MAINTENANCE AND PROTECTION OF TRAFFIC DUE TO CONSTRUCTION ACTIVITIES IN ACCORDANCE WITH THE LATEST EDITION OF THE U S DEPARTMENT OF TRANSPORTATION FEDERAL HIGHWAY ADMINISTRATION MANUAL ON UNIFORM TRAFFIC CONTROL DEVICES (MUTCD PART 6), AND/OR IN ACCORDANCE W/FDOT STD 600, WHICHEVER IS MORE STRINGENT

3 ALL STRIPING IN THE FLORIDA STATE RIGHT-OF-WAY IS TO BE THERMOPLASTIC

GENERAL TESTING NOTES

1 TESTING REQUIREMENTS SHALL BE IN ACCORDANCE WITH THE TESTING SCHEDULE CONTAINED WITHIN THESE PLANS OR PER APPLICABLE LOCAL GOVERNMENT OR REGULATORY AGENCY, WHICHEVER IS MORE STRINGENT SELECTION AND CONTRACTING WITH THE TESTING FIRMS SHALL BE THE RESPONSIBILITY OF THE CONTRACTOR IT SHALL BE THE RESPONSIBILITY OF THE CONTRACTOR TO COORDINATE AND SCHEDULE ALL TESTS

2 COPIES OF THE TEST REPORTS FOR ASPHALT, BASE, SUBGRADE, FILL AND BACKFILL UNDER ROADWAYS AND STRUCTURES, AND UTILITY TRENCHES SHALL BE PROVIDED DIRECTLY TO THE ENGINEER FOR APPROVAL IT SHALL BE THE RESPONSIBILITY OF THE CONTRACTOR TO COORDINATE TESTING AND INSURE THAT ALL APPLICABLE TESTS HAVE BEEN PERFORMED FAILURE TO OBTAIN TEST RESULTS AT ANY POINT OF CONSTRUCTION WILL REQUIRE THE REMOVAL OF THE IMPROVEMENT AND REPLACEMENT BY CONTRACTOR, AT NO ADDITIONAL COST TO THE OWNER IT SHOULD BE NOTED THAT THE APPLICABLE LOCAL GOVERNMENT MAY REQUIRE COMPACTION TESTING IN ACCORDANCE WITH THE TESTING SCHEDULE FOR UTILITY TRENCH FILL AND BACKFILL OR ACCORDING TO THE LOCAL GOVERNMENTAL STANDARDS, WHICHEVER IS MORE STRINGENT

TESTING SCHEDULE (FOR ALL WORK OUTSIDE THE FLORIDA STATE DEPARTMENT OF TRANSPORATION RIGHT-OF-WAY)

ITEM	TEST	TEST IDENTIFICATION	TEST REQUIREMENT	TESTING FREQUENCY
UTILITY TRENCH FILL & BACKFILL	MAXIMUM DENSITY/OPTIMUM MOISTURE CONTENT	AASHTO T-180 ASTM D-1557	N/A	PER SOIL TYPE
	FIELD DENSITY	AASHTO T-191 / AASHTO T-204 ATM D-1556 / ASTM D-2937	95% OF MAXIMUM DENSITY AT OPTIMUM MOISTURE CONTENT	ONE PER 500 L F HORIZONTAL OR ONE PER 750 S Y WITH A MINIMUM OF 3 TESTS, ALTERNATING 12 IN LIFTS
	SOIL GRADATION	AASHTO M-92	(15% PASSING NO 200 SEIVE)	ONE PER SOIL TYPE
FILL & BACKFILL UNDER ROADWAYS AND STRUCTURES	MAXIMUM DENSITY/OPTIMUM MOISTURE CONTENT	AASHTO T-180 ASTM D-1557	N/A	PER SOIL TYPE
	FIELD DENSITY	AASHTO T-191 / AASHTO T-204 ASTM D-1556, D-2937, D2922	98% OF MAXIMUM DENSITY AT OPTIMUM MOISTURE CONTENT	ONE PER 500 L F HORIZONTAL OR ONE PER 750 S Y WITH A MINIMUM OF 3 TESTS
	SOIL GRADATION	AASHTO M 92	(15% PASSING NO 200 SEIVE)	ONE PER SOIL TYPE
SUBGRADE	BEARING VALUES	LBR-FDOT	40 (MIN)	ONE PER SITE OR AT MATERIAL CHANGES
	MAXIMUM DENSITY/OPTIMUM MOISTURE CONTENT	AASHTO T-180 ASTM D-1557	N/A	PER SOIL TYPE
	FIELD DENSITY & THICKNESS	ASTM D-1556 OR ASTM D-2937	98% OF MAXIMUM DENSITY AT OPTIMUM MOISTURE CONTENT	ONE PER 500 L F HORIZONTAL OR ONE PER 750 S Y WITH A MINIMUM OF 3 TESTS
BASE (SAND-ASPHALT)	MARSHALL STABILITY TESTS	FDOT FM 5-511	500 LB (MIN)	ONE PER SOURCE OR AS MATERIAL CHANGES
	FIELD DENSITY AND THICKNESS	ASTM D-1559	95% OF LAB DENSITY AS DETERMINED BY MARSHALL METHOD	ONE PER 300 L F HORIZONTAL OR ONE PER 750 SY WITH A MINIMUM OF 3 TESTS
BASE (SAND-CLAY)	BEARING VALUES	LBR-FDOT	70 (MIN)	ONE PER SITE OR AS MATERIAL CHANGES
	MAXIMUM DENSITY/OPTIMUM MOISTURE CONTENT	AASHTO T-180 ASTM D-1557	N/A	PER SOIL TYPE
	FIELD DENSITY & THICKNESS	AASHTO T-191 OR AASHTO T-204 ASTM D-1556 OR ASTM D-2937	98% MAXIMUM DENSITY	ONE PER 500 L F HORIZONTAL OR ONE PER 750 S Y WITH A MINIMUM OF 3 TESTS
ASPHALT	MATERIALS QUALITY, BITUMEN CONTENT, AND GRADATION	AASHTO T-164, 5-30 ASTM D-2172	FDOT SPEC 330, 331, 916	FDOT SPEC 331, 916
	FIELD DENSITY & THICKNESS	ASTM D-2950	95% OF LAB DENSITY	ONE PER 500 L F HORIZONTAL OR ONE PER 750 S Y WITH A MINIMUM OF 3 TESTS
	AGGREGATE CERTIFICATION	N/A	FDOT SPEC 901,902	ONE PER SUPPLIER
	MARSHALL STABILITY AND DENSITY	ASTM D-1559	FDOT SPEC 331	ONE PER DAY
CNCRETE (MISC SITE WORK*)	SLUMP TEST	AASHTO T-119 ASTM C-143	2" TO 3"	AS REQUIRED BY SOILS ENGINEER OR ONE PER SET OF CYLINDERS
	COMPRESSIVE STRENGTH	AASHTO T-23 ASTM C-31	3000 PSI	ONE SET OF 3 CYLINDERS PER 50 CY PER DAY
	AIR CONTENT	AASHTO T-199	3% 6%	ONE PER SET OF CYLINDERS

*NOTE CONCRETE FOR SITE WORK INCLUDES BUT IS NOT LIMITED TO CURB & GUTTER, SIDEWALKS, ETC , EXCEPT CONCRETE PAVEMENT

APPROVED BY DESTIN CITY COUNCIL DATE/INITIALS 4/21/14

NOT RELEASED FOR CONSTRUCTION

No changes shall be made to, and construction shall not deviate from, these approved plans without prior written approval from the City of Destin. Unapproved deviations may result in the revocation of building permits and the inability to secure a Certificate of Occupancy.

Know what's **below.** **Call** before you dig.

Sunshine State One Call 811 of Florida, Inc

www.callsunshine.com

INNERLIGHT ENGINEERING CORPORATION
THINK • SOLVE • SERVE
THE APPLIED SCIENCE OF SUCCESS
5450 NORTH W STREET | PENSACOLA | FLORIDA | 32505

HENDERSON BEACH RESORT
ENTRY ROAD

DUNAVANT GULF, LLC
36008 EMERALD COAST PARKWAY, UNIT A-101
DESTIN, FLORIDA 32541

RECORD DATA
DATE 02 27 2014
REV DATE N/A
PROJ NO 131 0 0 10
DRAWN BY MTM
REVIEWED BY DES

SEAL
DAVID E. SMITH LICENSE No 58927 STATE OF FLORIDA PROFESSIONAL ENGINEER
FLORIDA REGISTRATION 58927
CERT OF AUTHORIZATION 30722
INNERLIGHT ENGINEERING CORP
5450 NORTH W STREET
PENSACOLA FL 32505
P 850 333 4370

SHEET TITLE
GENERAL NOTES (1 OF 2)

SHEET NUMBER
2 OF 8

INNERLIGHT ENGINEERING CORPORATION | THE DRAWINGS, SPECIFICATIONS, AND OTHER DOCUMENTS PREPARED BY INNERLIGHT ENGINEERING CORPORATION (IEC) ARE FOR THE SOLE USE ON THIS PROJECT UNLESS OTHERWISE PROVIDED, IEC SHALL BE DEEMED THE AUTHOR AND RETAIN ALL COMMON LAW STATUTORY AND OTHER RESERVED RIGHTS, INCLUDING COPYRIGHT

GENERAL UTILITY NOTES

1 ALL UTILITIES MUST BE INSTALLED PRIOR TO THE CONSTRUCTION OF CURB, BASE AND PAVEMENT APPROVAL BY LOCAL AUTHORITY MUST BE OBTAINED PRIOR TO FURTHER CONSTRUCTION

2 CONTRACTOR IS TO PROVIDE A SITE ELECTRICAL PLAN TO OWNER AND ENGINEER PRIOR TO COMMENCEMENT OF CONSTRUCTION (EXCLUDING DEMOLITION) CONDUITS FOR ELECTRICAL WORK IN CIVIL PLANS ARE ONLY TO NOTE AN INTENT TO SERVE SPECIFIC AREAS SITE ELECTRICAL PLAN SHOULD BE DEVELOPED IN COORDINATION WITH OWNER TO ANTICIPATE DEMAND AND ASSURE SUCH WORK MEETS APPLICABLE CODES

3 SITE CONTRACTOR SHALL BE RESPONSIBLE FOR COORDINATION WITH LIGHTING, IRRIGATION AND ELECTRICAL CONTRACTORS REGARDING REQUIRED CONDUITS

4 PIPE LENGTHS SHOWN ARE FROM CENTER OF STRUCTURE TO CENTER OF STRUCTURE PIPE LENGTHS ARE MEASURED IN LINEAR FEET (NOTED AS LF)

5 ALL MANHOLES, INLETS AND CLEANOUTS SUBJECT TO VEHICULAR LOADING, INCLUDING THOSE AREAS REQUIRING FUTURE MAINTENANCE, SHALL HAVE TRAFFIC BEARING (HS-20) RINGS, COVERS, GRATES, ETC

6 ALL STORM INLETS EQUAL TO OR GREATER THAN 5' DEEP SHALL BE EQUIPPED WITH ACCESS RUNGS

7 ALL STORM SEWER STUB-OUTS TO BE CLOSED W/ MASONRY SEAL AT THE STUB END

8 ALL STORMWATER DRAIN PIPE JOINTS WITHIN 6 FEET OF PAVING SHALL BE WRAPPED WITH FDOT APPROVED FABRIC UNLESS OTHERWISE NOTED OR STATED BY THE ENGINEERS

9 WATER AND WASTEWATER CONSTRUCTION SHALL BE IN ACCORDANCE WITH LOCAL AUTHORITY SPECIFICATIONS, UNLESS OTHERWISE SHOWN ON PLANS

10 A MINIMUM 36" COVER IS REQUIRED ON ALL PROPOSED WATER AND SANITARY LINES AND SERVICES FROM FINISHED GRADES, INCLUDING SWALES AND STORMWATER RETENTION / DETENTION AREAS

11 POTABLE WATER MAINS, SERVICES AND VALVES SHALL BE MARKED BY INSTALLATION OF NO 12 COPPER INSULATED TRACER WIRE IN TRENCH ABOVE PIPE TRACER WIRE SHALL BE INSTALLED THROUGHOUT THE ENTIRE SYSTEM

12 CONTRACTOR SHALL INSTALL SANITARY SEWER MAINS AT UNIFORM SLOPE BETWEEN MANHOLES SPECIFIED ON THE UTILITY PLAN ALIGNMENT OF PIPE BETWEEN MANHOLES SHALL BE STRAIGHT

13 FIRE HYDRANTS SHALL BE AMERICAN DARLING, RED, WITH TAMPER PROOF BONNET

14 LEAKAGE TESTS SHALL BE PERFORMED ON ALL SEWER PIPES AND MANHOLES

14 a A SEWER PIPES SHALL BE TESTED BY EITHER INFILTRATION OR EXFILTRATION, AS APPROPRIATE, SO THAT TEST IS PERFORMED WITH A MINIMUM POSITIVE HEAD OF 2 FEET TEST DURATION SHALL BE A MINIMUM OF 2 HOURS DURATION AND MAXIMUM ALLOWABLE LEAKAGE (IN OR OUT OF PIPE) SHALL NOT EXCEED 200 GALLONS PER INCH OF PIPE DIAMETER PER MILE PER DAY (EQUIVALENT TO 0 157 GALLONS PER INCH DIAMETER PER 100 FEET OF PIPE PER HOUR)

14 b MANHOLES SHALL BE TESTED BY PLUGGING LINES IN / OUT OF THE MANHOLE AND FILLING MANHOLE TO RIM WITH WATER AFTER ALLOWING WATER TO STABILIZE FOR ONE HOUR, CONTRACTOR SHALL FILL THE MANHOLE AGAIN, THEN CHECK WATER LEVEL AFTER TWO HOURS A DROP IN WATER LEVEL OF ONE INCH (1") PER FOOT OF MANHOLE DEPTH PER HOUR IS CONSIDERED ACCEPTABLE

15 IF PIPING OR MANHOLE FAIL LEAKAGE TESTS, CONTRACTOR SHALL TAKE CORRECTIVE ACTION TO RESEAL AND THEN RETEST

16 HYDROSTATIC TESTING OF WATER MAINS AND APPURTENANCES SHALL CONSIST OF BOTH PRESSURE AND LEAKAGE TESTS OF 2 HOUR DURATION EACH AT 150 PSIG UTILITY PERSONNEL SHALL BE PRESENT DURING TESTING

17 PRESSURE TESTS WILL BE CONDUCTED WITH A PRESSURE LOSS OF NOT MORE THAN 2 PSIG REGARDLESS OF PIPE LENGTH TESTED

18 LEAKAGE TESTS WILL BE CONDUCTED AFTER PRESSURE TESTS PIPE INSTALLATION WILL NOT BE ACCEPTED IF LEAKAGE IS GREATER THAN DETERMINED BY THE FOLLOWING FORMULA FROM ANSI/AWWA C-600-LATEST L=(SD(P)^ ½)/133200 WHERE L = ALLOWABLE LEAKAGE IN GALLONS PER HOUR, S = LENGTH OF PIPELINE TESTED IN FEET, D = NOMINAL DIAMETER OF PIPE IN INCHES, P = AVERAGE PRESSURE DURING LEAKAGE TEST IN PSIG

19 IF LEAKAGE IS GREATER THAN SPECIFIED LIMIT, CONTRACTOR SHALL TAKE CORRECTIVE ACTION TO LOCATE AND REPAIR DEFECTIVE MATERIAL VISIBLE LEAKS WILL BE CORRECTED REGARDLESS OF TOTAL LEAKAGE

20 ALL WATER PIPES AND FITTINGS WILL BE THOROUGHLY DISINFECTED PRIOR TO BEING PLACED INTO SERVICE DISINFECTION WILL FOLLOW APPLICABLE PROVISIONS OF PROCEDURES ESTABLISHED IN AWWA C-651-LATEST, RULE 62-555 345, F A C AND WILL BE IN ACCORDANCE WITH BOTH STATE AND LOCAL REQUIREMENTS

21 WHERE IT BECOMES NECESSARY TO TEMPORARILY REMOVE, REPOSITION, OR SUPPORT EXISTING FACILITIES, UTILITY POLES, ETC THIS WORK SHALL BE PERFORMED AT THE CONTRACTOR'S EXPENSE AND IN ACCORDANCE WITH REQUIREMENTS OF THE OWNER OF THE EXISTING FACILITY, UTILITY POLE, ETC THE CONTRACTOR SHALL GIVE PROPER NOTICE TO THE UTILITIES THE CONTRACTOR SHALL PHYSICALLY EXAMINE THE ENTIRE PROJECT SITE AND INFORM HIMSELF FULLY IN REGARD TO ALL CONDITIONS PERTAINING TO THE PLACE WHERE THE WORK IS TO BE PERFORMED FOR PURPOSE OF DETERMINING HIS COST TO PERFORM THE WORK

22 THE CONTRACTOR SHOULD PAY SPECIAL ATTENTION TO AREAS INVOLVING CLEARING AND GRUBBING, EXISTING FACILITIES REMOVAL AND REPLACEMENT, SUPPORT ON RELOCATION, AND WORK INVOLVED IN WETLAND AREAS WHERE IT IS NECESSARY TO CROSS OVER OR UNDER EXISTING FACILITIES, A MINIMUM OF 6" CLEARANCE SHALL BE PROVIDED BETWEEN THE NEW AND EXISTING UTILITY IT MAY BE NECESSARY AT SUCH LOCATIONS TO PROVIDE DUCTILE IRON PIPE FOR THE NEW UTILITY AND/OR SUPPORT AS SHOWN IN THE PLANS THIS WORK WILL BE AS DIRECTED IN THE FIELD OR SHOWN ON THE PLANS AND SHALL BE PAID FOR UNDER THE UNIT PRICES BID FOR THE VARIOUS SIZES AND TYPES OF PIPE THERE SHALL BE NO ADDITIONAL COMPENSATION FOR EXTRA DEPTH REQUIRED TO CROSS UNDER EXISTING FACILITIES

23 WHEN PIPE DEFLECTION IS USED TO CHANGE ALIGNMENT ON GRADE OF PRESSURE PIPE, DEFLECTION SHALL NOT EXCEED 50% OF THE MANUFACTURER'S MAXIMUM RECOMMENDED DEFLECTION IT SHALL BE RESPONSIBILITY OF THE CONTRACTOR TO COORDINATE AND SCHEDULE THE ACTIVITIES OF THE UTILITY COMPANIES INCLUDING BUT NOT LIMITED TO TV, TELEPHONE, GAS, POWER, ETC , AND PROVIDE IN ACCORDANCE WITH THE UTILITY COMPANY ANY NECESSARY CONDUITS FOR CROSSINGS UNDER PAVEMENT NO ADDITIONAL COMPENSATION SHALL BE PROVIDED FOR THIS SERVICE

24 ANY DAMAGE CAUSED BY THE UTILITY COMPANY TO THE IMPROVEMENTS OF THE CONTRACTOR SHALL BE REPAIRED IN ACCORDANCE WITH THESE CONTRACT DOCUMENTS IT SHALL BE THE RESPONSIBILITY OF THE CONTRACTOR TO INSURE THAT REPAIRS ARE PERFORMED, EITHER BY THE CONTRACTOR OR THE UTILITY COMPANY AT NO COST TO THE OWNER

REFERENCE SOURCES

ASTM	AMERICAN SOCIETY OF TESTING MATERIALS
ANSI	AMERICAN NATIONAL STANDARDS INSTITUTE
AASHTO	AMERICAN ASSOCIATION OF HIGHWAY AND TRANSPORTATION OFFICIALS
FDOT	FLORIDA DEPARTMENT OF TRANSPORTATION
FDEP	FLORIDA DEPARTMENT OF ENVIRONMENTAL PROTECTION

POLLUTION CONTROL

1 POLLUTION CONTROL MEASURES FOR THE SITE INCLUDE PROPER WASTE DISPOSAL, PROPER MANAGEMENT OF CHEMICAL STORAGE TANKS, EROSION FROM EGRESSES, SANITARY SEWAGE DISPOSAL AND ON-SITE VEHICLE STORAGE AND MAINTENANCE NO DEBRIS THAT IS GENERATED WILL BE BURIED ON SITE

1 1 WASTE DISPOSAL SOLID MATERIALS, INCLUDING BUILDING MATERIALS, SHALL BE PROPERLY DISPOSED OF OR REMOVED FROM THE SITE TO AN APPROPRIATE LANDFILL, AND SHALL NOT BE DISCHARGED INTO WATERS OF THE STATE, EXCEPT AS AUTHORIZED BY A SECTION 404 PERMIT CLEANUP AND DISPOSAL OF ALL WASTE MATERIALS (SOLID OR HAZARDOUS) SHALL BE IN ACCORDANCE WITH ALL RECOGNIZED LOCAL AND FEDERAL REQUIREMENTS ALL DISPOSAL SHALL BE TO APPROVED OFF-SITE WASTE FACILITIES ALL PERSONNEL WILL BE INSTRUCTED REGARDING THE CORRECT PROCEDURE FOR WASTE DISPOSAL NOTICES STATING THESE PRACTICES WILL BE POSTED IN THE APPROPRIATE ON-SITE OR OFF-SITE LOCATION THE INDIVIDUAL WHO MANAGES THE DAY-TO-DAY SITE OPERATIONS WILL BE RESPONSIBLE FOR SEEING THAT THESE PROCEDURES ARE FOLLOWED

1 2 OFF-SITE VEHICLE TRACKING OFF-SITE VEHICLE TRACKING OF DIRT, SOILS, AND SEDIMENTS AND THE GENERATION OF DUST SHALL BE MINIMIZED OR ELIMINATED TO THE MAXIMUM EXTENT PRACTICAL A STABILIZED CONSTRUCTION ENTRANCE HAS BEEN PROVIDED TO HELP REDUCE VEHICLE TRACKING OF SEDIMENTS THE PAVED STREET ADJACENT TO THE SITE ENTRANCE WILL BE CLEANED AS NECESSARY TO REMOVE ANY EXCESS MUD, DIRT, OR ROCK TRACKED FROM THE SITE DUMP TRUCKS HAULING MATERIAL FROM THE CONSTRUCTION SITE WILL BE COVERED WITH A TARPAULIN ON AN AS NEEDED BASIS A CONCRETE TRUCK WASHOUT LOCATION SHALL BE IN A TEMPORARY TRUCK WASH AREA LOCATED AT THE SITE ENTRANCE WASHOUT SHALL BE CONTAINED WITHIN A PIT OR TRENCH WITH NO MATERIAL LEAVING THE SITE OR IMPACTING VEGETATED OR NON-DISTURBED AREAS

1 3 SANITARY WASTE AS SITE CONDITIONS WARRANT, ALL SANITARY WASTE WILL BE MANAGED APPROPRIATELY BY EITHER AN ON-SITE PORTABLE UNIT(S) COLLECTED AT A MINIMUM OF ONCE PER WEEK BY THE LOCAL MUNICIPALITY AND/OR STATE OF GEORGIA LICENSED SANITARY WASTE MANAGEMENT CONTRACTOR, OR WITH A MANAGEMENT PLAN THAT ROUTES INDIVIDUALS TO A LEGAL AND APPROPRIATE SANITARY WASTE FACILITY

1 4 SPILL REMEDIATION MANAGEMENT PRACTICES THE FOLLOWING ARE THE BEST MANAGEMENT PRACTICES THAT WILL BE USED TO REDUCE THE RISK OF SPILLS OR OTHER ACCIDENTAL EXPOSURE OF MATERIALS AND SUBSTANCES, AS WELL AS A CLEANUP PLAN IF NECESSARY

RISK REDUCTION PETROLEUM, FERTILIZERS AND PAINT PRODUCTS

- AN EFFORT WILL BE MADE TO STORE ONLY ENOUGH PRODUCT REQUIRED TO DO THE JOB
- PRODUCTS WILL BE STORED IN THEIR ORIGINAL CONTAINERS WITH THE ORIGINAL MANUFACTURER'S LABEL, AND MUST BE KEPT OFF THE GROUND IN SECURELY FASTENED LIDS
- SUBSTANCES WILL NOT BE MIXED WITH ONE ANOTHER UNLESS RECOMMENDED BY THE MANUFACTURER
- WHENEVER POSSIBLE, ALL OF A PRODUCT WILL BE USED BEFORE DISPOSING OF THE CONTAINER
- MANUFACTURER'S RECOMMENDATIONS FOR PROPER USE AND DISPOSAL WILL BE FOLLOWED
- THE SITE SUPERINTENDENT WILL INSPECT DAILY TO ENSURE PROPER USE AND DISPOSAL OF MATERIALS
- ORIGINAL LABELS AND MATERIAL SAFETY DATA SHEETS (MSDS) WILL BE RETAINED
- IF SURPLUS PRODUCT MUST BE DISPOSED OF, MANUFACTURERS OR LOCAL AND STATE RECOMMENDED METHODS FOR PROPER DISPOSAL WILL BE FOLLOWED
- ALL ON-SITE VEHICLES WILL BE MONITORED FOR LEAKS AND RECEIVE REGULAR PREVENTIVE MAINTENANCE TO REDUCE THE CHANCE OF LEAKAGE
- ALL PRODUCTS SHALL BE STORED AND USED IN AN AREA THAT PROVIDES A SECONDARY CONTAINMENT FEATURE, AND SHALL BE LOCATED IN AN AREA WITH THE LEAST FORESEEABLE IMPACT IF A CATASTROPHIC EVENT SHOULD OCCUR FACILITIES SHOULD BE COVERED AND ACCESS RESTRICTED TO EMPLOYEES ONLY
- FERTILIZERS USED WILL BE APPLIED ONLY IN MINIMUM AMOUNTS AS RECOMMENDED BY THE MANUFACTURER ONCE APPLIED, FERTILIZER WILL BE WORKED INTO THE SOIL TO LIMIT EXPOSURE TO STORM WATER THE CONTENTS OF ANY PARTIALLY USED BAGS OF FERTILIZER WILL BE TRANSFERRED TO A SEALABLE PLASTIC BIN TO AVOID SPILLS
- KEEP FLAMMABLE LIQUIDS IN CLOSED CONTAINERS WHEN NOT IN USE
- USE PROPER RECEPTACLES TO DISPOSE OF CONTAMINATED WASTES THAT CANNOT BE RECYCLED IN CONFORMANCE WITH FEDERAL, STATE AND/OR LOCAL REGULATIONS
- DO NOT DUMP PETROLEUM PRODUCT WASTE, PESTICIDES, FERTILIZERS, PAINTS OR OTHER CHEMICALS INTO SEWERS, STORM DRAINS OR DRAINAGE CHANNELS
- PREVENT SPILLS OF PETROLEUM PRODUCTS FROM OCCURRING BY TAKING SPECIAL CARE WHEN HANDLING, AND KEEP FACILITIES AND EQUIPMENT MAINTAINED
- USE SPILL PROOF CONTAINERS AND FUNNELS WHEN TRANSFERRING FLUIDS FROM ONE CONTAINER TO ANOTHER
- POST INFORMATIONAL MATERIALS REGARDING CHEMICAL CONTROL

SPILL CONTROL PLAN THE FOLLOWING PRACTICES WILL BE FOLLOWED FOR SPILL PREVENTION AND CLEANUP·

- EMERGENCY CONTACT NUMBERS FOR SPILLS SHALL BE AVAILABLE ON-SITE
- MANUFACTURERS' RECOMMENDED METHODS FOR SPILL CLEANUP WILL BE ON SITE
- MATERIALS AND EQUIPMENT NECESSARY FOR SPILL CLEANUP SHALL BE AVAILABLE ON-SITE
- ALL SPILLS WILL BE CLEANED UP IMMEDIATELY AFTER DISCOVERY
- KEEP TRAINED STAFF IN SPILL RESPONSE ON CALL
- THE SPILL AREA WILL BE KEPT WELL VENTILATED AND PERSONNEL WILL WEAR APPROPRIATE PROTECTIVE CLOTHING TO PREVENT INJURY FROM CONTACT WITH A HAZARDOUS SUBSTANCE
- SPILLS OF TOXIC OR HAZARDOUS MATERIAL WILL BE REPORTED TO THE APPROPRIATE LOCAL OR FEDERAL GOVERNMENT AGENCY, REGARDLESS OF THE SIZE
- THE SPILL PREVENTION PLAN WILL BE ADJUSTED TO INCLUDE MEASURES TO PREVENT THIS TYPE OF SPILL FROM REOCCURRING AND HOW TO CLEAN UP THE SPILL IF THERE IS ANOTHER ONE A DESCRIPTION OF THE SPILL, WHAT CAUSED IT, AND THE CLEANUP MEASURES WILL ALSO BE INCLUDED

2 THE FOLLOWING MATERIALS OR SUBSTANCES ARE ANTICIPATED TO BE PRESENT ON-SITE DURING CONSTRUCTION CONCRETE AND ASPHALT, GRADED AGGREGATE BASE AND OTHER AGGREGATES, DETERGENTS, PAINTS (ENAMEL AND LATEX), METAL STUDS, CONCRETE, TAR, FERTILIZERS, PETROLEUM BASED PRODUCTS, CLEANING SOLVENTS, WOOD, MASONRY BLOCK, ROOFING SHINGLES

3 ALL PETROLEUM PRODUCTS SHALL BE STORED AND USED IN AN AREA THAT PROVIDES A SECONDARY CONTAINMENT FEATURE, AND SHALL BE LOCATED IN AN AREA WITH THE LEAST FORESEEABLE IMPACT IF A CATASTROPHIC EVENT SHOULD OCCUR EMERGENCY CONTACT NUMBERS AND PROCEDURES FOR SPILLS SHALL BE AVAILABLE ON-SITE

4 WASTE DISPOSAL SOLID MATERIALS, INCLUDING BUILDING MATERIALS WILL BE DISPOSED OF OFF SITE AND THEREFORE WILL NOT BE DISCHARGED TO WATERS OF THE STATE FROM THE CONSTRUCTION SITE

5 ALL POTENTIAL POLLUTION SOURCES WILL BE IDENTIFIED, INCLUDING PETROLEUM PRODUCT STORAGE, CONCRETE HANDLING, HERBICIDES AND ANY OTHER POLLUTANTS WHICH HAVE THE POTENTIAL TO BE EXPOSED TO RAINFALL AND BE DISCHARGED IN THE STORM WATER RUNOFF PRACTICES WILL BE IMPLEMENTED TO ENSURE THE REDUCTION OF THESE POLLUTANTS IN STORM WATER DISCHARGES

GENERAL CONSTRUCTION NOTE

ALL WORK WITHIN THE OKALOOSA COUNTY RIGHT-OF-WAY SHALL BE PER FDOT 2010 STANDARD SPECIFICATIONS FOR ROAD AND BRIDGE CONSTRUCTION AND FDOT 2014 DESIGN STANDARDS

LINETYPE LEGEND

EXISTING FEATURES
PROPOSED FEATURES
EXISTING RIGHT-OF-WAY
PROPOSED RIGHT-OF-WAY
E — EXISTING ELECTRIC
PROPOSED ELECTRIC
FO — EXISTING FIBER OPTIC
PROPOSED FIBER OPTIC
GAS — EXISTING GAS MAIN
PROPOSED GAS MAIN
SS — EXIST SANITARY SEWER MAIN
SS — PROP SANITARY SEWER MAIN
FM — EXISTING FORCE MAIN
FM — PROPOSED FORCE MAIN
EXISTING STORM SEWER
PROPOSED STORM SEWER
W — EXISTING WATER MAIN
W — PROPOSED WATER MAIN
F — PROPOSED FIRE MAIN
IR — PROPOSED IRRIGATION MAIN
X — EXISTING FENCE
X — PROPOSED FENCE
PROPOSED CHAIN LINK FENCE
PROPOSED WOOD FENCE
SF — SILT FENCE
C — EXISTING COMMUNICATION
C — PROPOSED COMMUNICATION
100 — EXISTING CONTOURS
19 — PROPOSED CONTOURS

SYMBOLS LEGEND

EXISTING	PROPOSED	
	PP	POWER POLE
PP/TP	PP/TP	COMBINATION POLE
TP	TP	TELEPHONE POLE
TEL PED	TEL PED	TELEPHONE PEDESTAL
SIG P	SIG P	SIGNAL POLE
LP	LP	LIGHT POLE
		GUY ANCHOR
GM	GM	GAS METER
GV	GV	GAS VALVE
		SANITARY SEWER MANHOLE
		SANITARY SEWER FLOW ARROW
		FIRE HYDRANT
WV	WV	WATER VALVE
M	M	WATER METER
		STORM MANHOLE
		CURB INLET
		GRATE INLET
		STORM FLOW ARROW

ABBREVIATIONS LEGEND

HDPE - HIGH DENSITY POLYETHYLENE
RCP - REINFORCED CONCRETE PIPE
CMP - CORRUGATED METAL PIPE
EOP - EDGE OF PAVEMENT
FOC - FACE OF CURB
BOC - BACK OF CURB
R - RADIUS
OHP - OVERHEAD POWER
LF - LINEAR FEET
CONC - CONCRETE
OC - ON CENTER
FACE - BUILDING FACE
RWP - RIGHT OF WAY PAVEMENT
HDP - HEAVY DUTY PAVEMENT
EXP - EXISTING PAVEMENT

GRADING LEGEND

TC - TOP OF CURB
BC - BOTTOM OF CURB
TW - TOP OF WALL
BW - BOTTOM OF WALL
EX - EXISTING GRADE
INV - INVERT
CO - CLEANOUT
MH - MANHOLE
C & G - CURB & GUTTER
WCR - WHEEL CHAIR RAMP

NOT RELEASED FOR CONSTRUCTION

APPROVED BY DESTIN CITY COUNCIL
DATE/INITIALS 4/21/14

No changes shall be made to, and construction shall not deviate from, these approved plans without prior written approval from the City of Destin. Unapproved deviations may result in the revocation of building permits and the inability to secure a Certificate of Occupancy.

Know what's below. Call before you dig.
Sunshine State One Call 811 of Florida, Inc.
www.callsunshine.com

INNERLIGHT ENGINEERING CORPORATION
SOLVE • THINK • THE APPLIED SCIENCE OF SUCCESS
5450 NORTH W STREET | PENSACOLA | FLORIDA | 32505

HENDERSON BEACH RESORT ENTRY ROAD
DUNAVANT GULF, LLC
36008 EMERALD COAST PARKWAY, UNIT A-101
DESTIN, FLORIDA 32541

RECORD DATA
DATE 02 27 2014
REV DATE N/A
PROJ NO 131 0 0 10
DRAWN BY MTM
REVIEWED BY DES

SEAL
DAVID E. SMITH
LICENSE No. 56927
MAR 25 2014
STATE OF FLORIDA
PROFESSIONAL ENGINEER

SHEET TITLE
GENERAL NOTES (2 OF 2)

SHEET NUMBER
3 OF 8

INNERLIGHT ENGINEERING CORPORATION | THE DRAWINGS SPECIFICATIONS, AND OTHER DOCUMENTS PREPARED BY INNERLIGHT ENGINEERING CORPORATION (ILC) ARE FOR THE SOLE USE ON THIS PROJECT UNLESS OTHERWISE PROVIDED, ILC SHALL BE DEEMED THE AUTHOR AND RETAIN ALL COMMON LAW STATUTORY AND OTHER RESERVED RIGHTS, INCLUDING COPYRIGHT

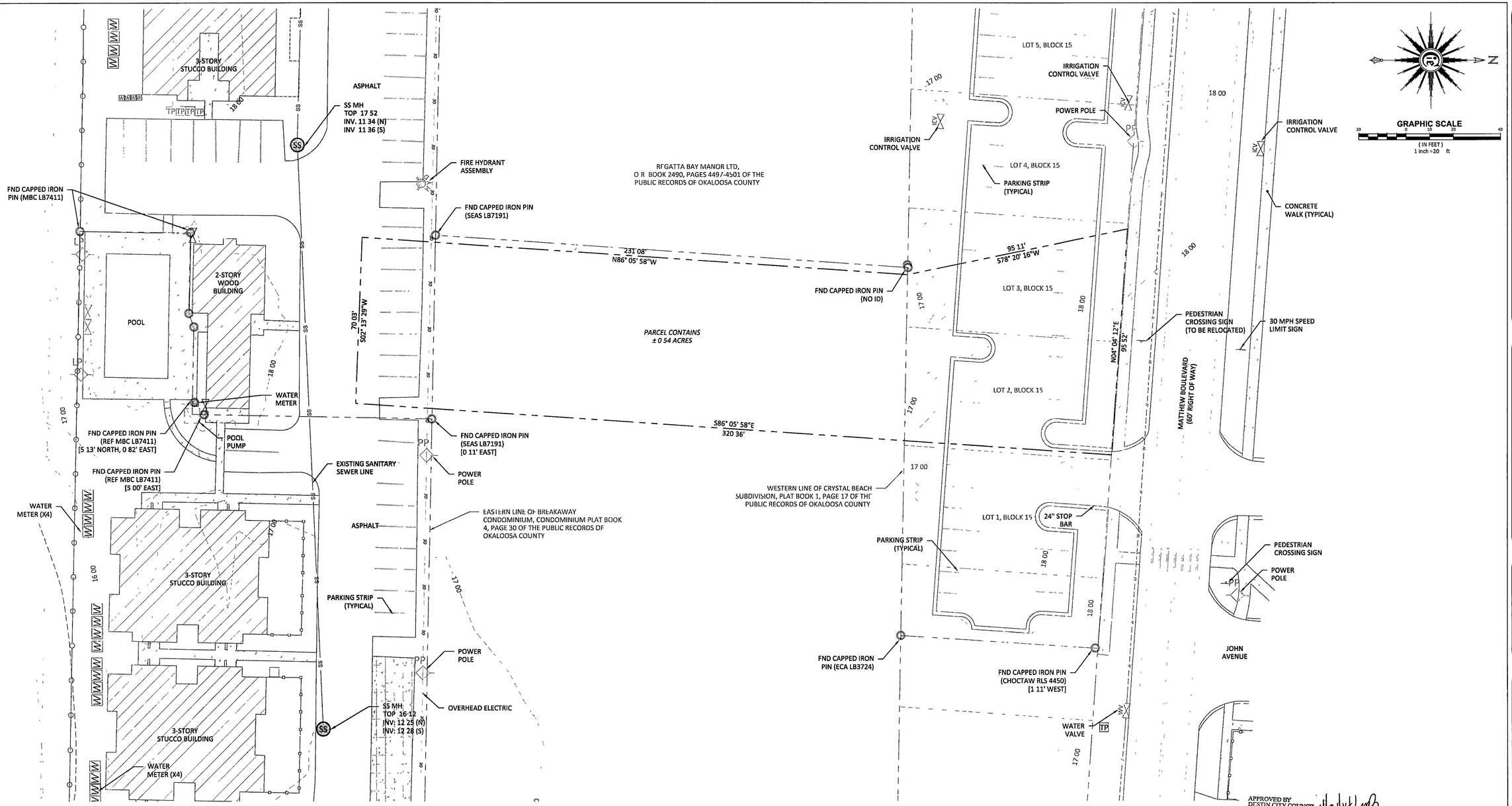

APPROVED BY
DESTIN CITY COUNCIL
DATE/INITIALS 4/21/14

"No changes shall be made to, and construction shall not deviate from, these approved plans without prior written approval from the City of Destin. Unapproved deviations may result in the revocation of building permits and the inability to secure a Certificate of Occupancy."

NOT RELEASED FOR CONSTRUCTION

EXISTING CONDITIONS NOTES

1 THIS MAP REPRESENTS AN EXISTING CONDITIONS PLAN AND IS ONLY FOR THE LANDS DESCRIBED SOURCES OF INFORMATION USED IN THE PREPARATION OF THIS EXISTING CONDITIONS PLAN INCLUDE, EXISTING MONUMENTATION, DEED RECORDED IN OFFICIAL RECORDS BOOK 2552 - PAGE 1185 IN THE PUBLIC RECORDS OF WALTON COUNTY, FLORIDA, COMPLETION DATE OF FIELD SURVEY OCTOBER 31, 2012 AND UPDATED ON NOVEMBER 7, 2012, BY DEVON GILES, FIELD BOOK 2, PAGES 75-76

2 THIS SURVEY DOES NOT REFLECT RESEARCH BY INNERLIGHT ENGINEERING CORPORATION, REGARDING TITLE OR EASEMENT THERE MAY EXIST DEEDS OF RECORD, UNRECORDED DEEDS, PLATS, UNRECORDED PLATS, EASEMENTS, RIGHTS-OF-WAYS, OR OTHER INSTRUMENTS THAT MAY AFFECT THIS PARCEL

3 NORTH AND THE BEARINGS DEPICTED HERON ARE BASED UPON THE STATE PLANE COORDINATE SYSTEM - FLORIDA NORTH ZONE, NORTH AMERICAN DATUM OF 1983 (NAD 83)

4 IMPROVEMENTS ARE AS SHOWN NO ATTEMPT WAS MADE TO LOCATE UNDERGROUND FEATURES, UNDERGROUND FOUNDATIONS, OR UNDERGROUND UTILITIES UNLESS OTHERWISE NOTED

5 NO WETLANDS DELINEATIONS WERE PERFORMED AS PART OF THIS SURVEY

FLOOD NOTE

FEDERAL EMERGENCY MANAGEMENT AGENCY (F E M A), FLOOD INSURANCE RATE MAP (F I R M) 12091C0493H, BEING PANEL 493 OF 494, EFFECTIVE DATE OF DECEMBER 6, 2002, INDICATES THAT THE SUBJECT PARCEL IS LOCATED IN ZONES "X" AND "VE" PORTIONS OF THE SITE ARE WITHIN THE COASTAL BARRIER ZONE, IDENTIFIED OCTOBER 01, 1983, AS DELINEATED NO CERTIFICATIONS ARE MADE REGARDING THE ACCURACY OF SAID F I R M

EXISTING CONDITIONS LEGEND

	BRICK PAVERS		BOUNDARY
	PAVEMENT		SANITARY SEWER MANHOLE
	CONCRETE		FIRE HYDRANT
	CONCRETE TILE		WATER VALVE
	GRAVEL		WATER METER
	STRUCTURE		IRRIGATION CONTROL VALVE
	WITHIN COASTAL BARRIER ZONE		STORM MANHOLE
15 00	MAJOR CONTOUR		GRATE INLET
16 00	MINOR CONTOUR		FOUND NAIL & DISK
	VEGETATION LINE		FOUND 4"X4" CONCRETE MONUMENT
	WOOD FENCE		FOUND CAPPED IRON PIN WITH CAP
	CHAINLINK FENCE		SET CAPPED IRON PIN WITH CAP

ABBREVIATIONS

R/W	RIGHT-OF-WAY	NAD83	NORTH AMERICAN DATUM 1983
N	NORTH	DNR	DEPARTMENT OF NATURAL RESOURCES
S	SOUTH	ORB	OFFICIAL RECORD BOOK
E	EAST	PG	PAGE
W	WEST	ELEV / EL	ELEVATION
SQ FT	SQUARE FEET	(R)	RECORD DIMENSION
AC	ACRES	°	DEGREES WHEN USED IN A BEARING OR ANGLE
L1	LINE & NUMBER TO LINE TABLE	'	MINUTES WHEN USED IN A BEARING OR ANGLE
C1	CURVE & NUMBER TO CURVE TABLE	"	SECONDS WHEN USED IN A BEARING OR ANGLE
LB	LICENSED BUSINESS	'	FEET OR DECIMAL THEREOF WHEN USED IN A DIMENSION
#	NUMBER		
ID	IDENTIFICATION	"	INCHES WHEN USED IN A DIMENSION
NGVD29	NATIONAL GEODETIC VERTICAL DATUM 1929	±	MORE OR LESS

Know what's below. Call before you dig.
Sunshine State One Call of Florida, Inc 811
www.callsunshine.com

INNERLIGHT ENGINEERING CORPORATION
SOLUTE • THE APPLIED SCIENCE OF SUCCESS
5450 NORTH W STREET | PENSACOLA | FLORIDA | 32505

HENDERSON BEACH RESORT
ENTRY ROAD

DUNAVANT GULF, LLC
36008 EMERALD COAST PARKWAY, UNIT A-101
DESTIN, FLORIDA 32541

RECORD DATA
DATE 02 27 2014
REV DATE N/A
PROJ NO 131 0 0 10
DRAWN BY MTM
REVIEWED BY DES

SEAL
NOT VALID UNLESS SEALED
DAVID E. SMITH
LICENSE No 58927
MAR 26 2014
STATE OF FLORIDA
PROFESSIONAL ENGINEER
FLORIDA CERTIFICATE OF AUTHORIZATION
LB # 7922
INNERLIGHT ENGINEERING CORP
5450 NORTH W STREET
PENSACOLA FL 32505
P 850 434 4370

SHEET TITLE
EXISTING CONDITIONS

SHEET NUMBER
4 OF 8

INNERLIGHT ENGINEERING CORPORATION | THE DRAWINGS SPECIFICATIONS, AND OTHER DOCUMENTS PREPARED BY INNERLIGHT ENGINEERING CORPORATION (IEC) ARE FOR THE SOLE USE ON THIS PROJECT UNLESS OTHERWISE PROVIDED, IEC SHALL BE DEEMED THE AUTHOR AND RETAIN ALL COMMON LAW STATUTORY AND OTHER RESERVED RIGHTS, INCLUDING COPYRIGHT

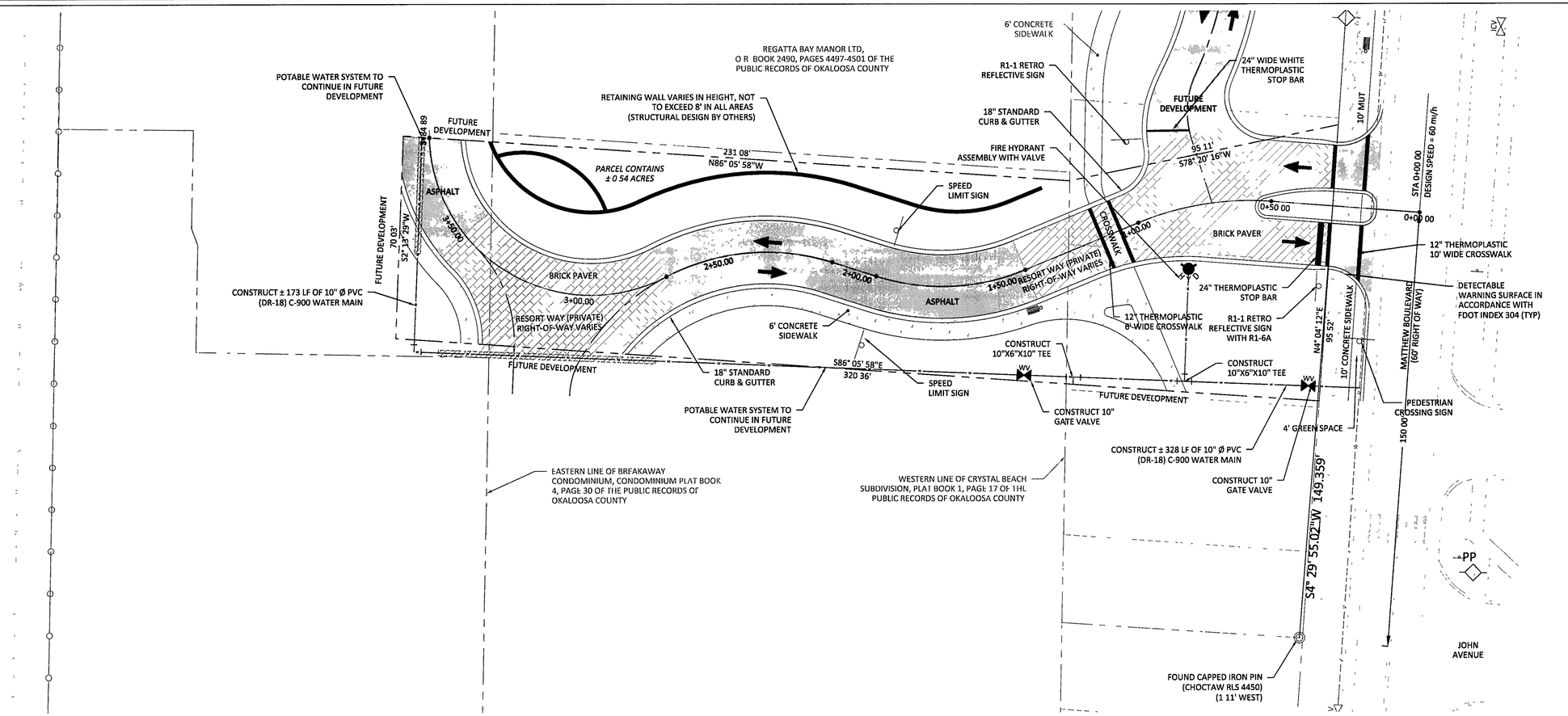

Know what's below. Call before you dig.

Sunshine State One Call of Florida Inc. 811

www.callsunshine.com

NOT RELEASED FOR CONSTRUCTION

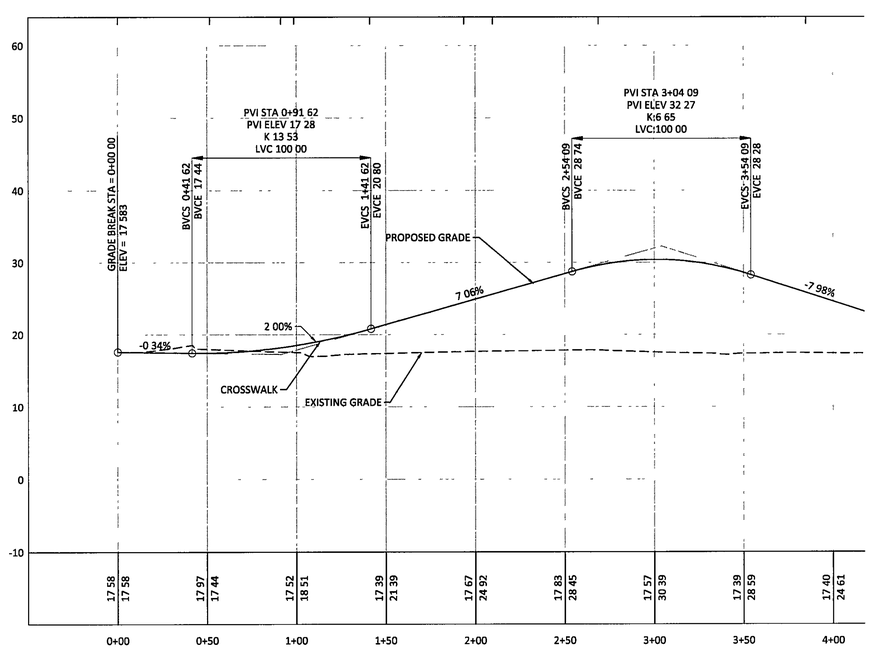

RESORT WAY (PRIVATE)

SITE PLAN NOTES

1 ALL CURB DIMENSIONS ARE MEASURED FROM BACK OF CURB
2 APPROVAL OF OUTDOOR SIGNAGE IS NOT PART OF THIS REQUEST
3 TRAFFIC SIGNAGE IN RIGHT-OF-WAY SHALL BE ON 3" DIAMETER ALUMINUM ROUND POSTS AND THE BASES SHALL BE CONCRETE WITH BREAKAWAY HARDWARE OR NO CONCRETE SOIL PLATE, BOTH WAYS, PER FDOT STANDARD INDEX 11860

APPROVED BY
DESTIN CITY COUNCIL 4/21/14 MMB
DATE/INITIALS

No changes shall be made to, and construction shall not deviate from, these approved plans without prior written approval from the City of Destin. Unapproved deviations may result in the revocation of building permits and the inability to secure a Certificate of Occupancy.

INNERLIGHT ENGINEERING CORPORATION
SERVE • SOLVE • THRIVE
THE APPLIED SCIENCE OF SUCCESS
5450 NORTH W STREET | PENSACOLA | FLORIDA | 32505

HENDERSON BEACH RESORT ENTRY ROAD

DUNAVANT GULF, LLC
36008 EMERALD COAST PARKWAY, UNIT A-101
DESTIN, FLORIDA 32541

RECORD DATA
DATE 02 27 2014
REV DATE N/A
PROJ NO 131 0 0 10
DRAWN BY MTM
REVIEWED BY DES

SEAL
NOT VALID UNLESS SEALED AND SIGNATURE
DAVID E. SMITH
LICENSE
No. 56927
MAR 2 3 2014
STATE OF FLORIDA
PROFESSIONAL ENGINEER
FLORIDA CERTIFICATE OF AUTHORIZATION
CERT OF AUTHORIZATION 27722
INNERLIGHT ENGINEERING CORP
5450 NORTH W STREET
PENSACOLA FL 32505
P 850 333 3370

SHEET TITLE
SITE & UTILITY PLAN WITH ROADWAY PROFILE

SHEET NUMBER
5 OF 8

INNERLIGHT ENGINEERING CORPORATION | THE DRAWINGS, SPECIFICATIONS, AND OTHER DOCUMENTS PREPARED BY INNERLIGHT ENGINEERING CORPORATION (ILC) ARE FOR THE SOLE USE ON THIS PROJECT UNLESS OTHERWISE PROVIDED, ILC IS DEEMED THE AUTHOR AND RETAINS ALL COMMON LAW, STATUTORY AND OTHER RESERVED RIGHTS, INCLUDING COPYRIGHT

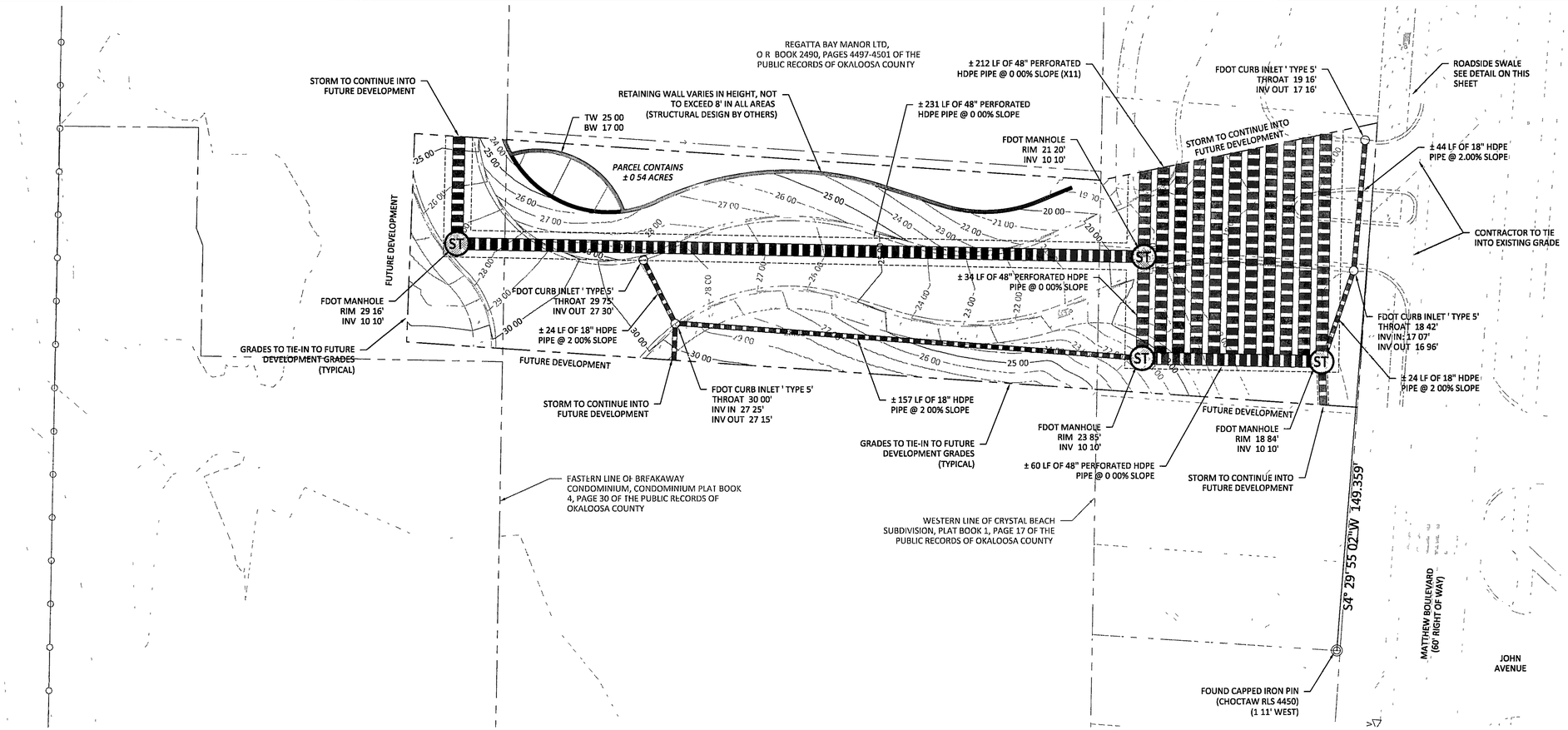

NOT RELEASED FOR CONSTRUCTION

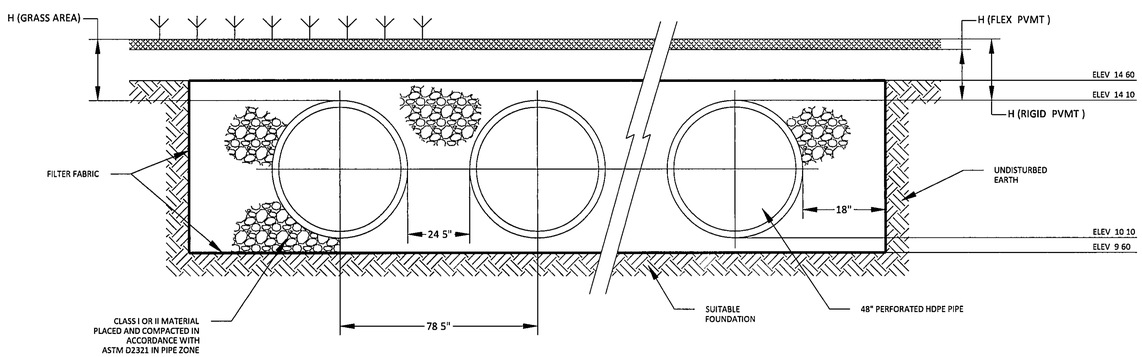

TYPICAL EXFILTRATION TRENCH DETAIL

NTS

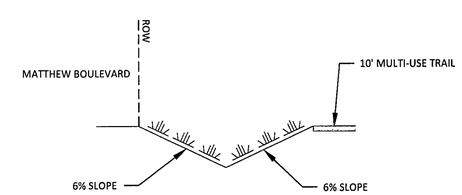

ROADSIDE SWALE

NTS

APPROVED BY DESTIN CITY COUNCIL
DATE/INITIALS 4/21/14

No changes shall be made to, and construction shall not deviate from, these approved plans without prior written approval from the City of Destin. Unapproved deviations may result in the revocation of building permits and the inability to secure a Certificate of Occupancy.

INNERLIGHT ENGINEERING CORPORATION
SOLVE • THE APPLIED SCIENCE OF SUCCESS
5450 NORTH W STREET | PENSACOLA | FLORIDA | 32505

HENDERSON BEACH RESORT ENTRY ROAD

DUNAVANT GULF, LLC
36008 EMERALD COAST PARKWAY, UNIT A-101
DESTIN, FLORIDA 32541

RECORD DATA
DATE 02 27 2014
REV DATE N/A
PROJ NO 131 0 0 10
DRAWN BY MTM
REVIEWED BY DES

SEAL
DAVID E SMITH
LICENSE No 56927
STATE OF FLORIDA
PROFESSIONAL ENGINEER
MAR 2 3 2014

SHEET TITLE
GRADING & DRAINAGE PLAN

SHEET NUMBER
6 OF 8

INNERLIGHT ENGINEERING CORPORATION | THE DRAWINGS SPECIFICATIONS, AND OTHER DOCUMENTS PREPARED BY INNERLIGHT ENGINEERING CORPORATION (ILC) ARE FOR THE SOLE USE ON THIS PROJECT UNLESS OTHERWISE PROVIDED, ILC SHALL RETAIN THE AUTHOR AND RETAIN ALL COMMON LAW STATUTORY AND OTHER RESERVED RIGHTS INCLUDING COPYRIGHT

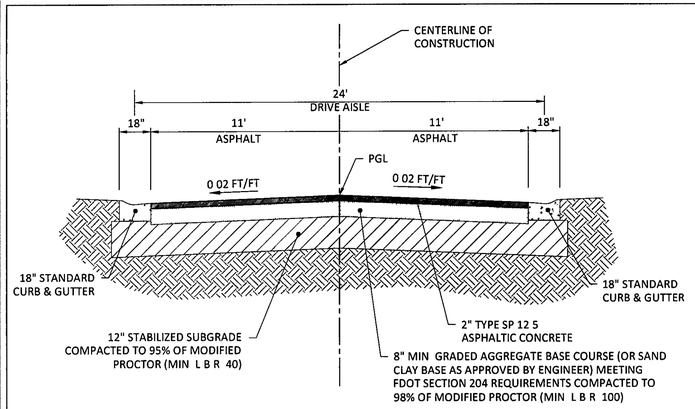

1/8 **TYPICAL SECTION #B**

NTS

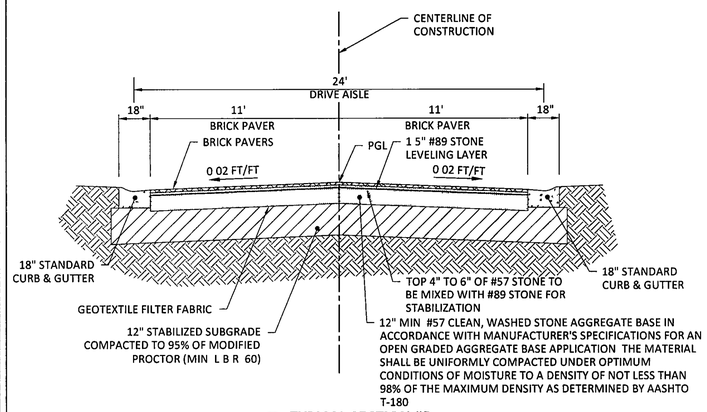

2/8 **TYPICAL SECTION #B**

NTS

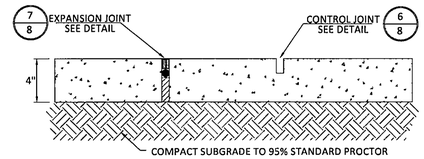

NOTE
EXPANSION JOINTS REQUIRED AT ALL STRUCTURES (I E WALLS, CURB, ETC), MAX SPACING TO BE 25 FT CONTROL JOINTS TO BE SPACED EVERY 6 FT (SCORE WITHIN 12 HOURS OF POUR) 3000P S I CONCRETE, 2 INCH SLUMP, WITH BROOM FINISH

5/8 **CONCRETE SIDEWALK DETAIL**

NTS

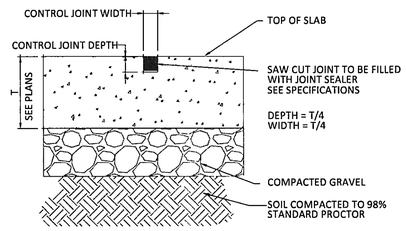

TO BE INSTALLED AT MAXIMUM 15 FT SPACING

6/8 **CONTROL JOINT DETAIL**

NTS

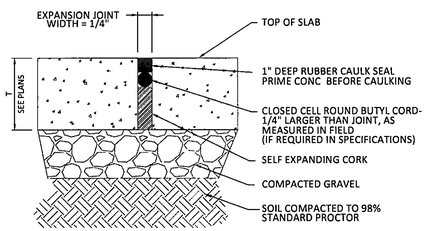

INSTALL WHERE PAVEMENT MEETS DOCK, WALLS, & MANHOLES TO BE INSTALLED AT MAXIMUM 40 FT SPACING

7/8 **EXPANSION JOINT DETAIL**

NTS

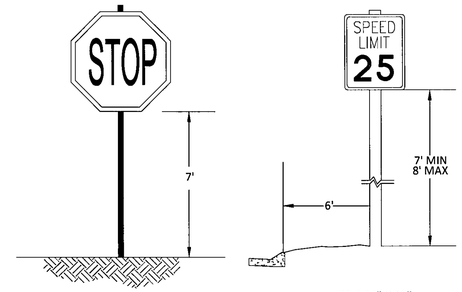

R1-1 36" X 36"
NTS

R2-1 24" X 30"
NTS

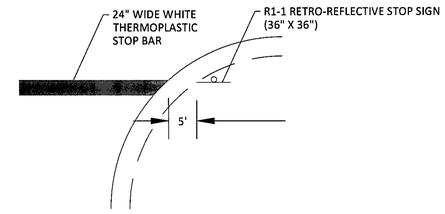

9/8 **SIGN PLACEMENT DETAIL**

NTS

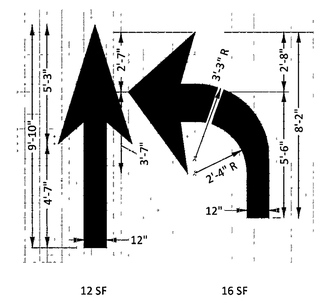

RIGHT TURN ARROW TO BE REVERSED
DIMENSIONS ARE WITHIN 1" ±

NOTE
WHEN ARROW AND PAVEMENT MESSAGE ARE USED TOGETHER, THE ARROW SHALL BE LOCATED DOWN STREAM OF THE PAVEMENT MESSAGE AND SHALL BE SEPARATED FROM THE PAVEMENT MESSAGE BY A DISTANCE OF 25' (BASE OF THE ARROW TO BASE OF THE MESSAGE)

11/8 **PAVEMENT ARROW & MESSAGE DETAIL**

NTS

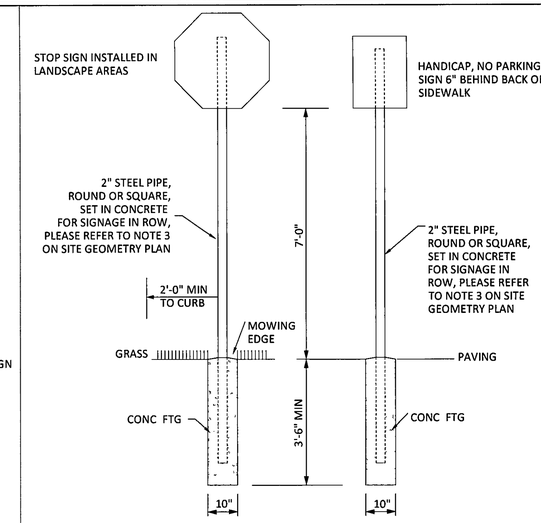

10/8 **TRAFFIC SIGNAGE DETAIL**

NTS

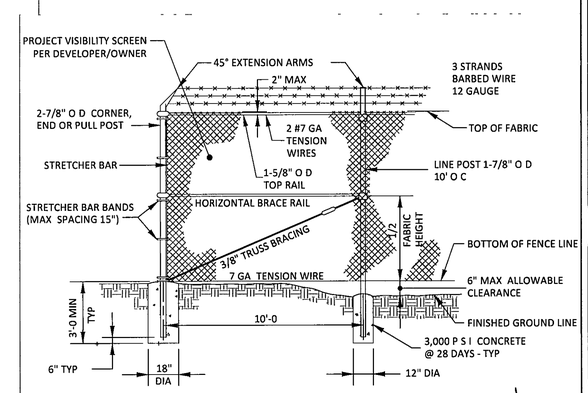

12/8 **CHAIN-LINK FENCE**

NTS

* PROJECT VISIBILITY SCREEN PER DEVELOPER/OWNER

APPROVED BY CRESTVIEW CITY COUNCIL
DATE/INITIALS 4/21/14

No changes shall be made to, and construction shall not deviate from, these approved plans without prior written approval from the City of Destin. Unapproved deviations may result in the revocation of building permits and the inability to secure a Certificate of Occupancy.

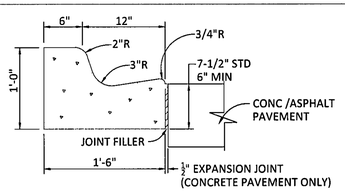

WHEN USED ON HIGH SIDE OF ROADWAYS, THE CROSS SLOPE OF THE GUTTER SHALL MATCH THE CROSS SLOPE OF THE ADJACENT PAVEMENT AND THE THICKNESS OF THE LIP SHALL BE 6" MIN , UNLESS OTHERWISE SHOWN ON PLANS EXPANSION JOINT, PREFORMED JOINT FILLER AND JOINT SEAL ARE REQUIRED BETWEEN CURB AND CONCRETE PAVEMENT OR CONCRETE STRUCTURES

3/8 **18" STANDARD CURB & GUTTER**

NTS

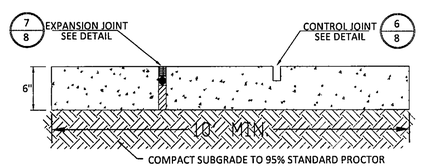

NOTE
EXPANSION JOINTS REQUIRED AT ALL STRUCTURES (I E WALLS, CURB, ETC), MAX SPACING TO BE 25 FT CONTROL JOINTS TO BE SPACED EVERY 6 FT (SCORE WITHIN 12 HOURS OF POUR) 3000P S I CONCRETE, 2 INCH SLUMP, WITH BROOM FINISH

8/8 **CONCRETE MULTI-USE TRAIL (MUT) DETAIL**

NOT TO SCALE

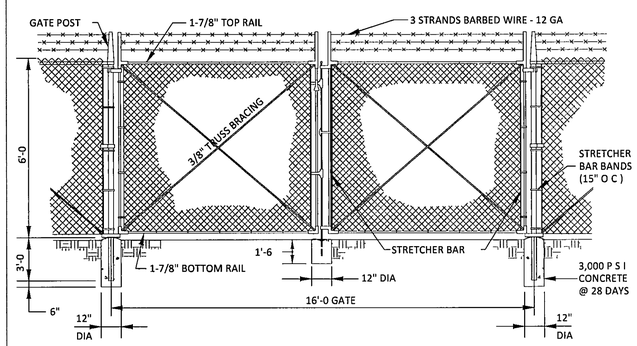

13/8 **CHAIN-LINK DOUBLE GATE**

NTS

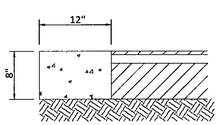

RIBBON CURBING SHALL INCORPORATE 1/2" EXPANSION JOINTS SPACED AND FORMED IN 20 FT SECTIONS OR LESS CURBING SHALL BE SEALED WITH JOINT SEALER BETWEEN CURB AND CONCRETE PAVEMENT

4/8 **RIBBON CURB**

NTS

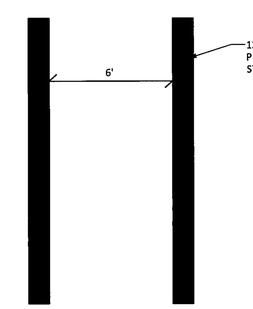

14/8 **CROSS WALK STRIPING**

NTS

NOT RELEASED FOR CONSTRUCTION

Know what's below. Call before you dig.
Sunshine State One Call 811 of Florida, Inc.
www.callsunshine.com

INNERLIGHT ENGINEERING CORPORATION
THINK • SOLVE • THE APPLIED SCIENCE OF SUCCESS
5450 NORTH W STREET | PENSACOLA | FLORIDA | 32505

HENDERSON BEACH RESORT ENTRY ROAD

DUNAVANT GULF, LLC
36008 EMERALD COAST PARKWAY, UNIT A-101
DESTIN, FLORIDA 32541

RECORD DATA
DATE 02 27 2014
REV DATE N/A
PROJ NO 131 0 0 10
DRAWN BY MTM
REVIEWED BY DES

SEAL
NOT VALID UNLESS SEALED
DAVID E. SMITH
LICENSE No 68927
MAR 25 2014
STATE OF FLORIDA
PROFESSIONAL ENGINEER
FLORIDA CERTIFICATE OF AUTHORIZATION 28927
GBR CERTIFICATE OF AUTHORIZATION 29722
INNERLIGHT ENGINEERING CORP
5450 NORTH W STREET
PENSACOLA FL 32505
P 850 433 1370

SHEET TITLE
CONSTRUCTION DETAILS (1 OF 2)

SHEET NUMBER
7 OF 8

INNERLIGHT ENGINEERING CORPORATION | THE DRAWINGS, SPECIFICATIONS, AND OTHER DOCUMENTS PREPARED BY INNERLIGHT ENGINEERING CORPORATION (IEC) ARE FOR THE SOLE USE ON THIS PROJECT UNLESS OTHERWISE PROVIDED, IEC SHALL BE DEEMED THE AUTHOR AND RETAIN ALL COMMON LAW, STATUTORY AND OTHER RESERVED RIGHTS, INCLUDING COPYRIGHT

GENERAL NOTES

1. Sidewalk curb ramps shall be constructed at locations that will provide continuous unobstructed pedestrian circulation path to pedestrian areas, alleys & facilities within the right of way and to accessible pedestrian routes on adjacent sites. Curbed facilities with sidewalks, we those without sidewalk are to have sidewalks constructed to all intersections and turnouts with curbed returns. To accommodate curb ramps, partial curb returns are to extend to the lines prescribed in Index No. 515. Ramps constructed at locations without sidewalks are to have a turning area provided in the top of each ramp. See LANDINGS FOR CURB RAMPS WITHOUT SIDEWALKS.
2. When altering existing pedestrian facilities, where it is using restricted conditions are due to accommodation of a ramp slope of 1:12, ramp slope between 1:12 and 1:10 is permitted for a rise of 6 maximum. Where compliance with the requirements for cross slope cannot be fully met, the minimum feasible cross slope shall be provided. Ramp slopes are not required to exceed 30 in length.
3. If sidewalk curb ramps are located where pedestrians must walk across the ramp, then provide transition slopes to the ramp, otherwise a sidewalk curb may be required.
4. All sidewalks, ramps, and landings with a cross slope of 0.02 shown in this Index are 0.02 max. All ramp slopes shown in this Index are 1:12 or 1:12 maximum. Landings shall have slopes less than or equal to 0.02 in any direction.
5. Grade breaks at the top and toe of ramps shall be parallel to each other and perpendicular to the direction of the ramp slope.
6. When a sidewalk curb ramp is constructed in the existing curb, curb and gutter, and/or sidewalk, the existing curb or curb and gutter shall be removed to the nearest joint beyond the transition slope, or to the edge of the curb transition, or to the extent that no remaining section of curb or curb and gutter is less than 5' long. Existing sidewalks shall be removed to the nearest joint beyond the transition slope, or to the edge of the ramp, whichever is less than 5' long. For CONCRETE SIDEWALK details refer to Indx No. 310.
7. Sidewalk curb ramp alpha designations are for reference purposes (plans, permits, etc.). Alpha designations CR I and CR J were intentionally omitted.
8. Date table warnings shall extend the full width of the ramp and to a depth of 2'. Detectable warnings shall be constructed in accordance with Specification Section 527. For the layout of detectable warnings refer to the TYPICAL PLACEMENT OF DETECTABLE WARNINGS details. Detectable warnings shall not be provided on transition slopes.
9. When detectable warnings are placed on a slope, grooves than 5% curves shall be aligned with the centerline of the ramp, otherwise details are not required to be aligned.
10. Detectable warnings shall be required on sidewalks at:
    a. Intersecting roads
    b. Median Crossings greater than or equal to 6.6' in width
    c. Railroad Crossings
    d. Signalized driveways
11. Detectable Warnings - Acceptance Criteria:
    a. Color and texture shall be compliant and uniform.
    b. 90% of individual truncated domes shall be in a compliance with the Americans with Disabilities Act Standards for Transportation Facilities, Section 705.
    c. There shall be no more than 4 non compliant domes in any one square foot.
    d. Non compliant domes shall not be adjacent in either dimension or diagonally.
    e. Surfaces shall not deviate more than 0.02" from a true plane.
12. Detectable warnings shall be installed no less or than 6' from the back of curb or edge of pavement.
13. Detectable warnings shall not be installed over grade breaks.

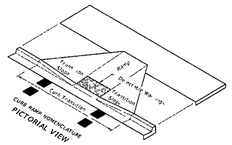

LEGEND

Detectable Warnings

LAST REVISION	DESCRIPTION			INDEX NO	SHEET NO
07/01/13		FDOT 2014 DESIGN STANDARDS	DETECTABLE WARNINGS AND SIDEWALK CURB RAMPS	304	1 of 7

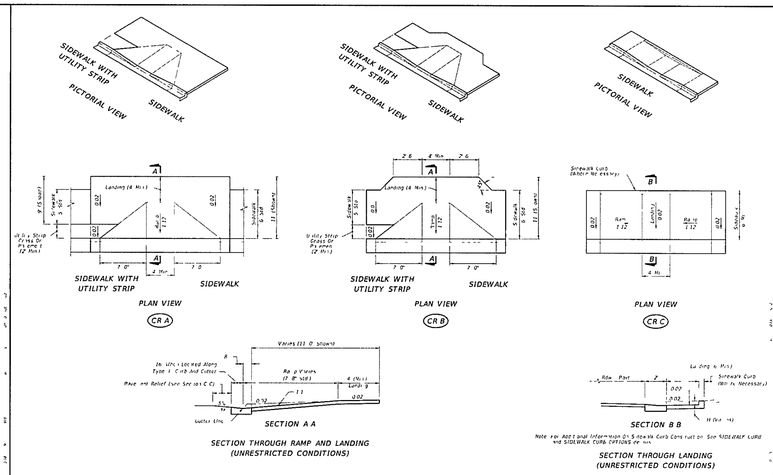

SIDEWALK CURB RAMPS WHERE RAMP AND LANDING DEPTHS ARE NOT RESTRICTED

LAST REVISION	DESCRIPTION			INDEX NO	SHEET NO
07/01/13		FDOT 2014 DESIGN STANDARDS	DETECTABLE WARNINGS AND SIDEWALK CURB RAMPS	304	2 of 7

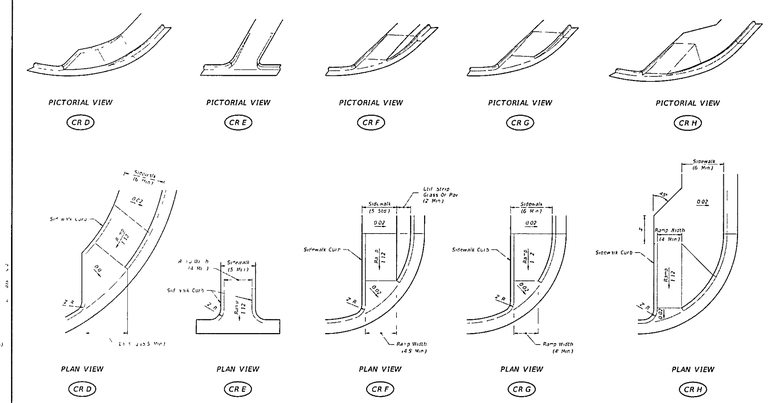

DIMENSIONAL FEATURES OF SIDEWALK CURB RAMPS FOR LINEAR PEDESTRIAN TRAFFIC

LAST REVISION	DESCRIPTION			INDEX NO	SHEET NO
07/01/13		FDOT 2014 DESIGN STANDARDS	DETECTABLE WARNINGS AND SIDEWALK CURB RAMPS	304	3 of 7

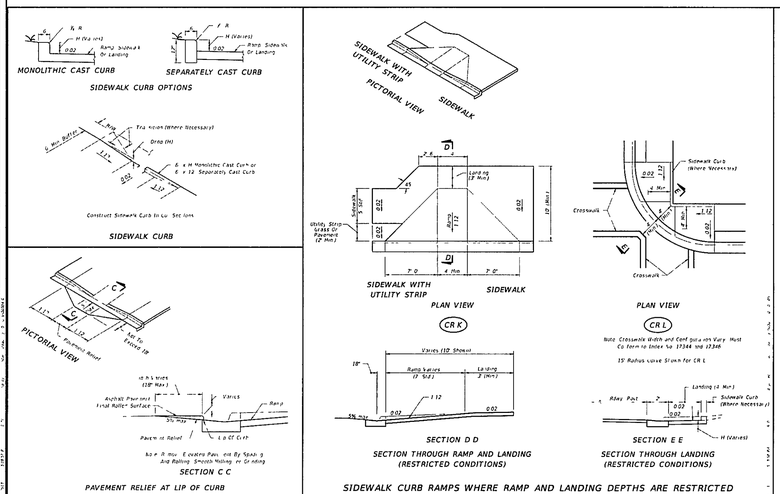

SIDEWALK CURB RAMPS WHERE RAMP AND LANDING DEPTHS ARE RESTRICTED

LAST REVISION	DESCRIPTION			INDEX NO	SHEET NO
07/01/13		FDOT 2014 DESIGN STANDARDS	DETECTABLE WARNINGS AND SIDEWALK CURB RAMPS	304	4 of 7

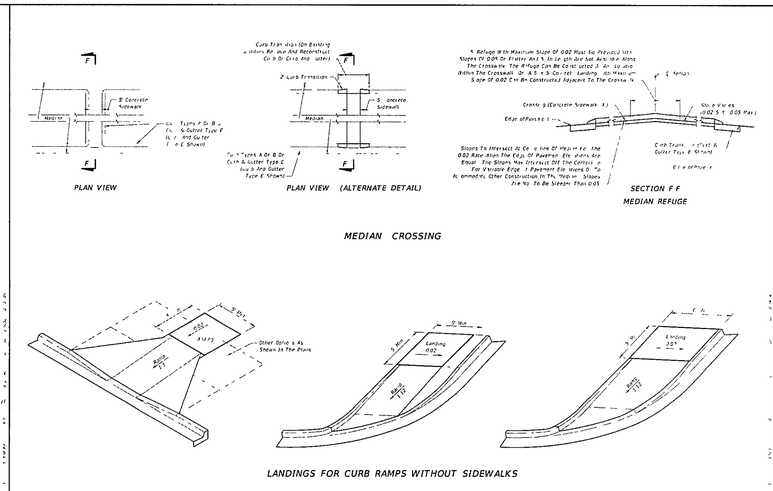

LAST REVISION	DESCRIPTION			INDEX NO	SHEET NO
07/01/13		FDOT 2014 DESIGN STANDARDS	DETECTABLE WARNINGS AND SIDEWALK CURB RAMPS	304	5 of 7

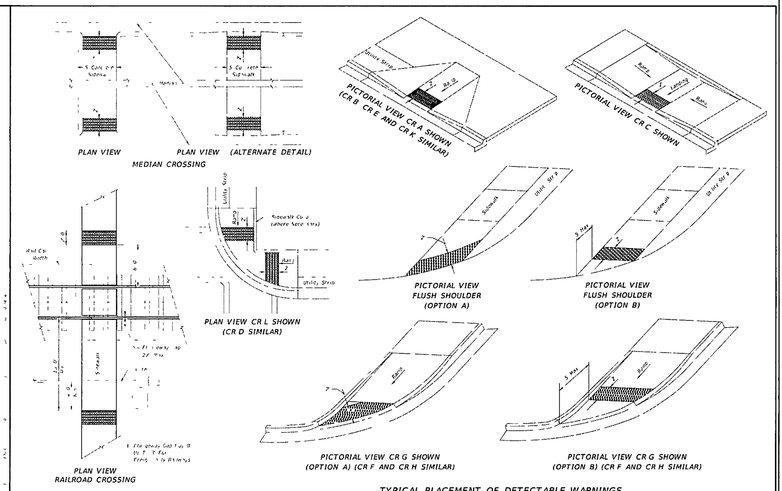

LAST REVISION	DESCRIPTION			INDEX NO	SHEET NO
07/01/13		FDOT 2014 DESIGN STANDARDS	DETECTABLE WARNINGS AND SIDEWALK CURB RAMPS	304	6 of 7

1 **DETECTABLE WARNINGS AND SIDEWALK CURB RAMPS**

NOT TO SCALE

APPROVED BY DESTIN CITY COUNCIL DATE/INITIALS 4/21/14 MMB

No changes shall be made to, and construction shall not deviate from, these approved plans without prior written approval from the City of Destin. Unapproved deviations may result in the revocation of building permits and the inability to secure a Certificate of Occupancy.

INNERLIGHT ENGINEERING CORPORATION
SOLVE THE APPLIED SCIENCE OF SUCCESS
5430 NORTH W STREET | PENSACOLA | FLORIDA | 32505

HENDERSON BEACH RESORT ENTRY ROAD

DUNAVANT GULF, LLC
36008 EMERALD COAST PARKWAY, UNIT A-101
DESTIN, FLORIDA 32541

RECORD DATA
DATE 02 27 2014
REV DATE N/A
PROJ NO 131 0 0 10
DRAWN BY MTM
REVIEWED BY DES

SEAL
NOT VALID WITHOUT THE SIGNATURE AND SEAL OF A FLORIDA LICENSED ENGINEER
DAVID E. SMITH
LICENSE No 69927
MAR 28 2014
STATE OF FLORIDA
PROFESSIONAL ENGINEER
FLORIDA CERTIFICATE OF AUTHORIZATION
INNERLIGHT ENGINEERING CORP
5430 NORTH W STREET
PENSACOLA FL 32505
P 850 313 4320

SHEET TITLE

CONSTRUCTION DETAILS (2 OF 2)

SHEET NUMBER

8 OF 8

INNERLIGHT ENGINEERING CORPORATION | THE DRAWINGS, SPECIFICATIONS, AND OTHER DOCUMENTS PREPARED BY INNERLIGHT ENGINEERING CORPORATION (IEC) ARE FOR THE SOLE USE ON THIS PROJECT UNLESS OTHERWISE PROVIDED. IEC SHALL BE DEEMED THE AUTHOR AND RETAIN ALL COMMON LAW, STATUTORY AND OTHER RESERVED RIGHTS INCLUDING COPYRIGHT.

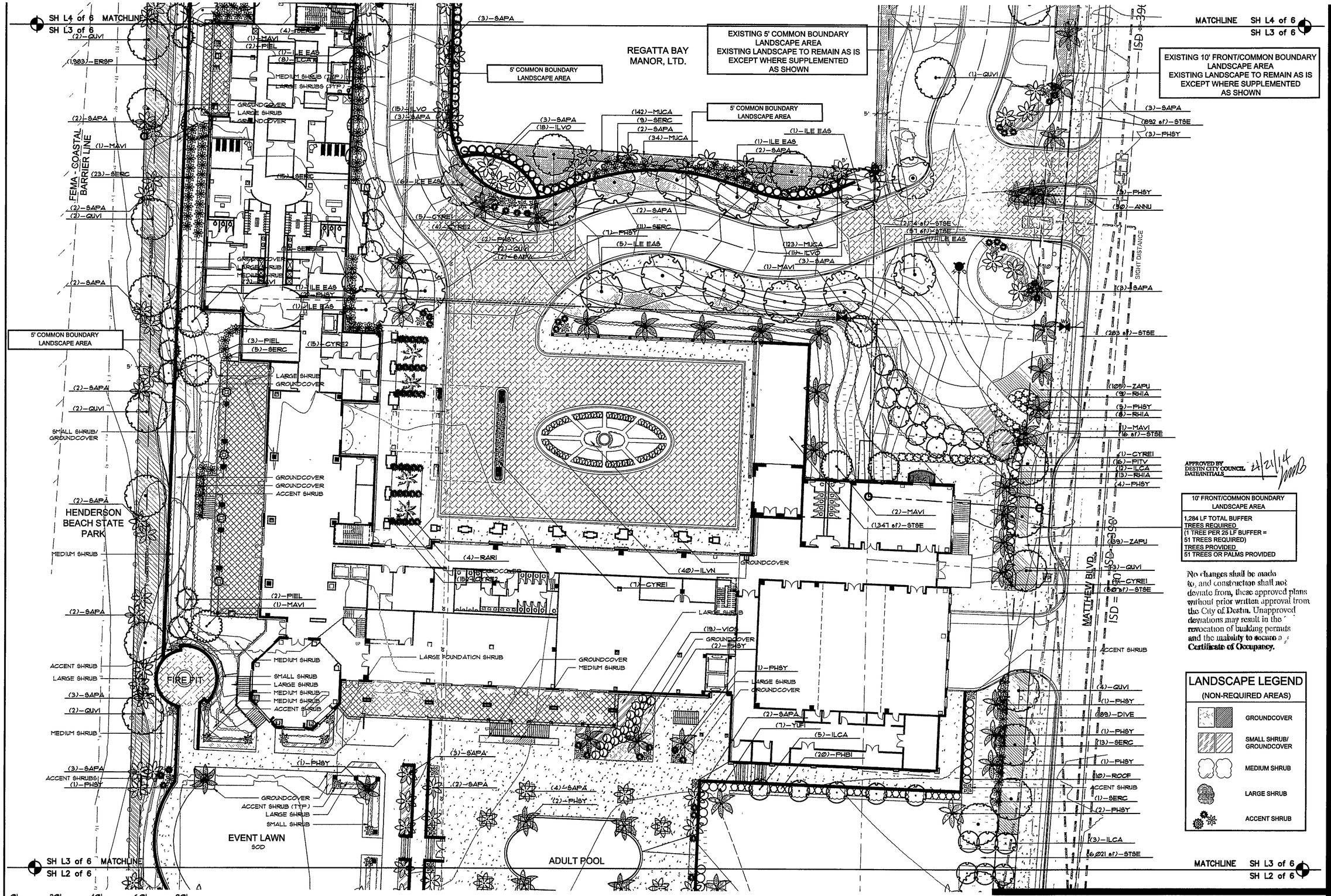

APPROVED BY DESTIN CITY COUNCIL DATE/INITIALS 4/21/14

10' FRONT/COMMON BOUNDARY LANDSCAPE AREA
1,284 LF TOTAL BUFFER TREES REQUIRED (1 TREE PER 25 LF BUFFER = 51 TREES REQUIRED) TREES PROVIDED 51 TREES OR PALMS PROVIDED

No changes shall be made to, and construction shall not deviate from, these approved plans without prior written approval from the City of Destin. Unapproved deviations may result in the revocation of building permits and the inability to secure a Certificate of Occupancy.

LANDSCAPE LEGEND
(NON-REQUIRED AREAS)

- GROUNDCOVER
- SMALL SHRUB/ GROUNDCOVER
- MEDIUM SHRUB
- LARGE SHRUB
- ACCENT SHRUB

SCALE: 1" - 20'-0"

NORTH

SURVEY INFORMATION, COMPILED FROM AS-BUILT SURVEY PROVIDED BY INNERLIGHT ENGINEERING CORPORATION. FILE ALTA SURVEY 2007.dwg.

PLAN IS SUBJECT TO CHANGE

Wood+Partners Inc. WPi
Landscape Architects
Land Planners
612 S Copeland Street ■ Tallahassee, FL 32304
850.391.0360 ■ Fax 850 386 1010 ■ www.wood-partners.com

Dunavant Gulf, LLC
2705 Scenic Highway 89
Destin, Florida

LANDSCAPE PERMIT DOCUMENTS
HENDERSON BEACH RESORT
Okaloosa County, Florida

MARK L. BARKER, RLA, ASLA
FLORIDA CERTIFICATION NO. 6667
DATE

DRAWN BY: MM/TG/PH
CHECKED BY: TG/SK

This drawing is an instrument of service & remains the property of Wood+Partners Inc. It may not be copied or reproduced in any manner without written permission.

#	REVISION	DATE	BY
1	SUBMITTAL REVISION	03 19 14	PH

DATE
11-15-2013
PROJECT NUMBER
02-12016
SHEET TITLE
Landscape Plan

SHEET NUMBER
L3 of 6

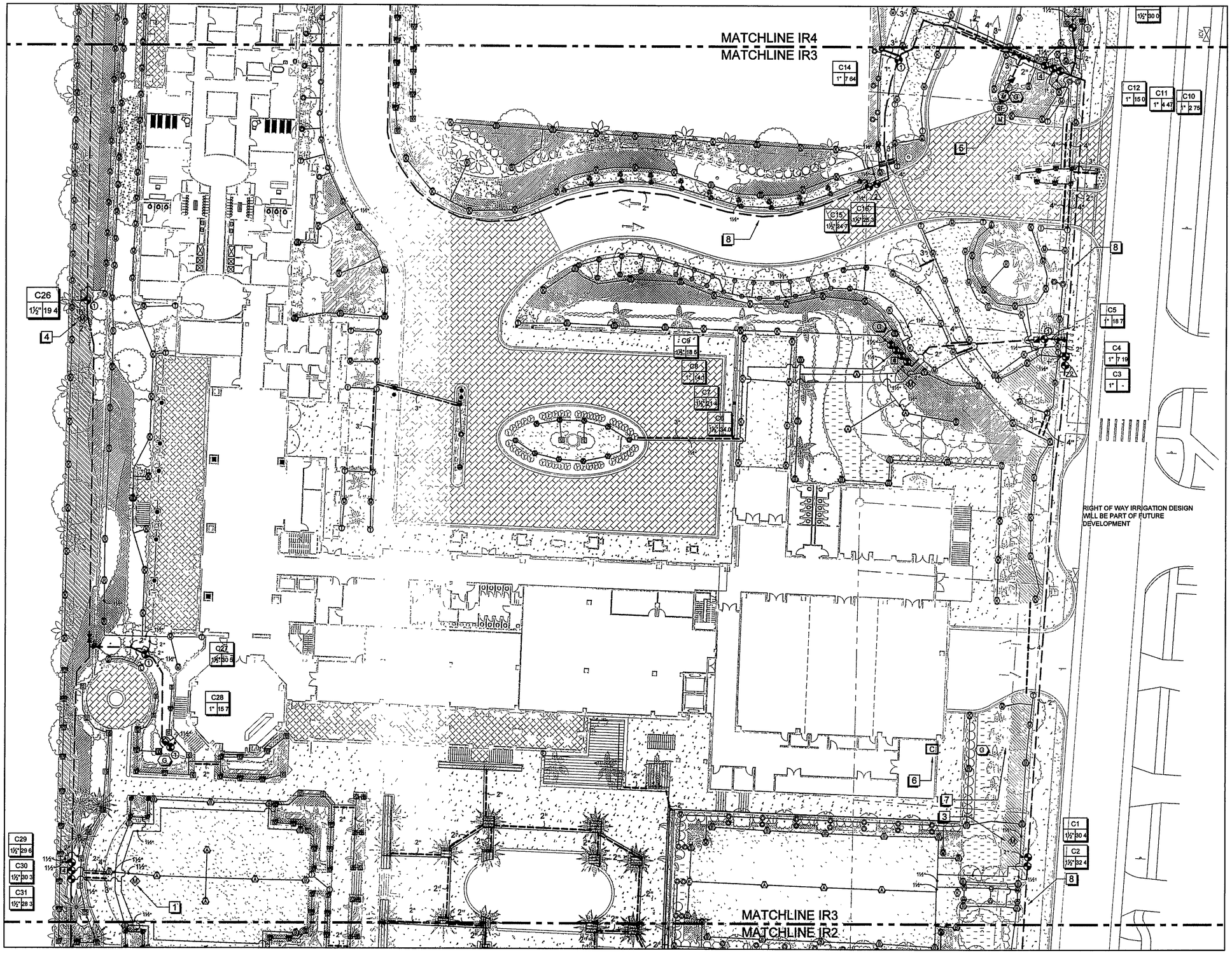

APPROVED BY
DESTIN CITY COUNCIL
DATE/INITIALS 4/21/14

No changes shall be made to, and construction shall not deviate from, these approved plans without prior written approval from the City of Destin. Unapproved deviations may result in the revocation of building permits and the inability to secure a Certificate of Occupancy.

0 20 40 60 feet
SCALE 1" = 20'

NORTH

SURVEY INFORMATION, COMPILED FROM AS-BUILT SURVEY PROVIDED BY INTERLIGHT ENGINEERING CORPORATION. FILE ALTA SURVEY 2007.dwg.

PLAN IS SUBJECT TO CHANGE.

Clark Irrigation Design & Consulting, Inc.
Sustaining Landscapes Conserving Water
P O Box 693
Lavonia, Ga 30553
O 706-356-0309
F 706-356-1948

Wood+Partners Inc. WPi
Landscape Architects
Land Planners
612 S Copeland Street ■ Tallahassee, FL 32304
850 391 0360 ■ Fax 850 386 1010 ■ www.woodandpartners.com

Dunavant Gulf, LLC
2705 Scenic Highway 89
Destin, Florida

LANDSCAPE PERMIT DOCUMENTS
HENDERSON BEACH RESORT
Okaloosa County, Florida

DRAWN BY: RDC
CHECKED BY: JD/SK

#	REVISION	DATE	BY
1	SUBMITTAL REVISION	03.19.14	MC

DATE
11-15-2013
PROJECT NUMBER
02-12016
SHEET TITLE
IRRIGATION PLAN

SHEET NUMBER
IR3 of 7